AD 615502

FINAL TECHNICAL REPORT
1151-TR-3

DOD USER NEEDS STUDY

PHASE I

Submitted to

Advanced Research Projects Agency
Department of Defense
Washington, D. C. 20301

Distribution of This Document
Is Unlimited.

May 14, 1965

AUERBACH Corporation • Philadelphia 3, Pennsylvania

FOREWORD

AUERBACH Corporation was awarded a contract (Contract Number SD-219) by the Office of the Secretary of Defense to perform a comprehensive survey of the RDT&E personnel in the Department of Defense to determine how these individuals acquire and utilize technical and scientific information in the conduct of specific tasks associated with their work.

The study was conducted under the sponsorship of the Advanced Research Projects Agency, Office of the Secretary of Defense; administered under the direction of Mr. Fred A. Koether, Director, Technical Information, Advanced Research Projects Agency; and directed by Mr. Walter M. Carlson, Director of Technical Information, Office of the Director of Defense Research and Engineering, Department of Defense.

In addition to the AUERBACH staff utilized in performing this study, outside consultants were employed in specific areas. Dr. John de Cani, of the Statistics Department of the University of Pennsylvania, provided consultation in the statistical aspects of the study; Dr. Herbert Menzel from Columbia University provided inputs for the survey design; and Dr. Robert Sleight and Mr. Kenneth Cook of the Applied Psychology Corporation were consulted in the use of interviewing techniques.

The report is presented in two volumes. Volume I consists of three sections entitled: Management Report, Conduct of Study, and Analysis of Data, plus four appendices entitled: Study Execution, Discussion and Results of Survey Questions, Bibliography of User Studies, and Glossary. Volume II consists of three sections entitled: Interview Guide Handbook, Computer Program Documentation, and Statistical Tables.

NOTE:

The detailed data collected, supplementary computer printouts, and the computer programs developed to compile and tabulate the data have been delivered to the Department of Defense. Persons interested in these items should contact:

Director of Technical Information
Office of the Director of Defense Research
and Engineering
The Pentagon
Washington, D.C. 20301

TABLE OF CONTENTS

Paragraph	Title	Page
	VOLUME I	
	SECTION I. MANAGEMENT REPORT	
1.1	INTRODUCTION	1-1
1.2	STATEMENT OF STUDY OBJECTIVES	1-3
1.3	DATA BASE DEVELOPED	1-5
1.4	FINDINGS	1-6
1.5	CONCLUSIONS	1-14
1.6	RECOMMENDATIONS	1-17
1.7	STUDY LIMITATIONS	1-23
	SECTION II. CONDUCT OF STUDY	
2.1	INTRODUCTION	2-1
2.2	DEVELOP STUDY PLAN	2-1
2.3	REVIEW PREVIOUS USER NEED STUDIES	2-1
2.4	DEVELOP SURVEY METHODS	2-3
2.5	INTERVIEW GUIDE AND HANDBOOK	2-3
2.6	INTERVIEWER SELECTION AND TRAINING	2-4
2.7	PILOT TESTS	2-4
2.8	SAMPLING PLAN	2-5
2.9	SURVEY MANAGEMENT	2-5
2.10	CONDUCT OF INTERVIEWS	2-5
2.11	AUDIT AND QUALITY CONTROL	2-6
2.12	DATA COMPILATION SYSTEM	2-6
2.13	ANALYSIS OF DATA	2-7
	SECTION III. ANALYSIS OF DATA	
3.1	INTRODUCTION	3-1
3.2	CHARACTERISTICS OF THE DOD RDT&E POPULATION	3-4
3.3	CLASS OF INFORMATION CHUNK	3-7

AUERBACH

TABLE OF CONTENTS (Contd.)

Paragraph	Title	Page
	VOLUME I (Contd.)	
3.4	FIRST SOURCE OF TASK-REQUIRED INFORMATION . . .	3-16
3.5	VOLUME OF INFORMATION (Exposure)	3-20
3.6	SEARCH AIDS	3-21
3.7	DEPTH OF INFORMATION	3-22
3.8	RETRIEVAL TIME	3-23
	APPENDIX A. STUDY EXECUTION	
	APPENDIX B. DISCUSSION AND RESULTS OF SURVEY QUESTIONS	
	APPENDIX C. BIBLIOGRAPHY OF USER STUDIES	
	APPENDIX D. GLOSSARY OF TERMS	
	VOLUME II	
	SECTION IV. INTERVIEW GUIDE HANDBOOK	
	SECTION V. COMPUTER PROGRAM DOCUMENTATION	
5.1	SUMMARY OF COMPUTER SYSTEM	5-1
5.2	APPROACH TO DOCUMENTATION	5-3
5.3	COMPUTER OPERATOR INSTRUCTIONS	5-3
5.4	COMPUTER RUNNING TIME	5-4
5.5	PREPARATION OF INQUIRIES FOR INTERROGATION OF MASTER FILE OF INTERVIEW DATA MAINTAINED ON MAGNETIC TAPE	5-6
5.6	SPECIFICATION OF TWO-LEVEL FREQUENCY DISTRIBUTION INQUIRIES FOR WHICH THE FREQUENCIES ARE TO BE LISTED IN DESCENDING SEQUENCE	5-8

Paragraph	Title	Page
	VOLUME II (Contd.)	
5.7	COMPUTER RUN TO CREATE OR MAINTAIN THE INTERVIEW DATA TAPE	5-9
5.8	COMPUTER RUN TO ANALYZE THE DATA ON THE INTERVIEW DATA TAPE	5-21
5.9	COMPUTER RUN TO SORT ANALYSIS TAPE	5-37
5.10	COMPUTER RUN TO FORMAT ANALYZED INTERVIEW DATA AND TO PRINT	5-37
5.11	COMPUTER RUN TO POOL INTERVIEW ANSWER CATEGORIES	5-47
5.12	COMPUTER RUN TO PRINT CELL IDENTIFICATIONS AND FREQUENCIES IN DESCENDING SEQUENCE	5-50
5.13	PROGRAMMED ERROR INSTRUCTIONS	5-56
	SECTION VI. STATISTICAL TABLES	
6.1	SELECTION OF TABLES	6-3
6.2	VALUE OF QUESTIONS	6-3
6.3	ONE-WAY TABLES	6-12
6.4	TWO-WAY TABLES	6-45
6.5	THREE-WAY TABLES	6-121

LIST OF ILLUSTRATIONS

Figure	Title	Page
1-1	Highest Degree	1-7
1-2	Type of Activity	1-7
1-3	Kind of Task	1-8
1-4	Major Output of a Task	1-8
1-5	Distribution of Classes of Information Used	1-9
1-6	Volume of Information Used	1-10
1-7	Utility of Search Aids	1-10
1-8	Retrieval Time	1-11
1-9	First Source of Task Related Information	1-12
1-10	Depth of Information	1-13
2-1	Study Process	2-2
3-1	Example of a Two-Way Table	3-3
3-2	Kind of Activity Vs. Post Task Information	3-6
3-3	MIL/GS Rating Vs. Use of DDC	3-8
3-4	Type of Activity Vs. Use of Information Centers	3-9
3-5	MOS or Job Code Vs. Presence of Information Problem	3-10
3-6	Highest Degree and Field Vs. Presence of Information Problem	3-11
3-7	Relationships Between Classes of Information and Characteristics of Tasks	3-14
3-8	Class of Chunk Vs. Media	3-15
3-9	Kind of Task Vs. First Source	3-18
3-10	Man-Days of Task Vs. First Source	3-19
3-11	Desired Exposure to Information Vs. Desired Retrieval Time	3-26
5-1	DOD Study — System Flow Chart	5-2
5-2	Record Layouts	5-10
5-3	General Logic Flow Chart. Interview Data Tape — Creation and Maintenance (ME001)	5-11
5-4	General Logic Flow Chart. Interview Data Tape — Analysis (ME002)	5-23
5-5	Record Layouts	5-28

LIST OF ILLUSTRATIONS (Contd.)

Figure	Title	Page
5-6	General Logic Flow Chart. Format Analyzed Data and Print (ME004)	5-39
5-7	General Logic Flow Chart. Interview Data Tape — Pooling Categories (ME005)	5-48
5-8	General Logic Flow Chart. Computer Program to Print Cell Identifications and Frequencies in Descending Sequence (ME006)	5-51
5-9	Inquiry Specification Card Format. Computer Program to Print Cell Identifications and Frequencies in Descending Sequence (ME006)	5-52
5-10	Format of Listing Cell Identifications and Frequencies in Descending Sequence (ME006)	5-54
6-1	Example of a Two-Way Table	6-2

SECTION IV. INTERVIEW GUIDE HANDBOOK

For the

DOD Study to Determine
How Scientific and Technical Information
is Acquired and Used by
RDT&E Personnel

CONTRACT SD-219

Sponsored by Director, Technical Information, DDR&E
through the Advanced Research Projects Agency
Washington D. C. 20301

May 8, 1964

Revised and Reprinted, May 14, 1965

AUERBACH Corporation • Philadelphia 3, Pennsylvania

PREFACE

The material in this handbook was developed and compiled as part of an extensive training course for the staff conducting depth interviews of DoD research, development, test, and evaluation personnel. These interviews are part of a major study being conducted by AUERBACH Corporation to determine how information is used to carry out scientific and technical tasks within the Department of Defense. (The word "information" is used here in a generic sense, embracing both data and information.)

The basis for the study is recognition of the facts that the scientist/engineer user of a scientific and technical information system is an integral and primary part of the system and that his needs are neither broadly known nor well understood.

The first fact, that man is an integral and primary part of the system, stems from an overall systems-engineering view of how scientific and technical functions are conducted. These functions can be described as "production processes" in which information composes much or all of the basic raw material and the final product. Information flows into the process, is assimilated, updated, upgraded, added to, or translated into another, perhaps improved and more utilitarian, form. From this viewpoint, the scientist/engineer is an information processor. He acquires, manipulates, consumes, updates, improves and reports information. As both a producer and consumer of information he is by definition a primary element in an information system. The measure of information-system effectiveness is how well it serves the scientist/engineer's specific needs in terms of timeliness and utility.

As previously stated these needs are neither broadly known nor well understood, despite the fact that numerous scientific and technical use studies have been conducted and reported in the literature. While a majority of these studies appear to have been well conducted and have produced valuable information for specific purposes, they do not, individually nor collectively, provide sufficient general criteria for defining in depth the specific information needs of any broad segment of the technical community.

There are a number of reasons for this. A large number of the studies were conducted for narrowly specific purposes in unique environments. Many of them have been concerned only with scientists in a research atmosphere, usually in an experimental laboratory environment. Few studies have been concerned with engineers, particularly those with a product or administrative orientation. Most of the studies have concentrated on the users' information needs in terms of the types of packages they use, e.g., journal, rather than the information they need. Wide differences exist in the sampling, interviewing, and data-analysis techniques used, making correlation of results difficult or impossible. Many of the studies were not conducted with the degree of methodological sophistication available today — few included procedures for validation of system hypotheses that are essential to sound systems-engineering design.

Consequently, few of the studies provide a reliable base for extrapolation to general conclusions about the information needs of a broad segment of the technical community. The study for which this handbook was developed is an attempt to provide the base and general criteria needed for this kind of extrapolation.

The community being studied consists of 36,000 military and civilian scientists and engineers performing a broad range of scientific and engineering activities. This population provides the basis for a soundly-structured study in which uniform and current techniques for sampling, interviewing, and data analysis can be used to scientifically examine the information needs of different types of scientists, engineers, and technical administrators.

This study effort is expected to produce pertinent information on what kind of information the scientist/engineer uses, in what form he uses it, where he obains it, and what kind of decisions he makes with it. Further it should produce better insight into a number of important systems-design questions, such as how should the information be packaged, from what locations and by what means should it be transmitted, and how up-to-date and how well correlated the material must be for effective use.

Best Available Copy

TABLE OF CONTENTS

Paragraph	Title	Page
1.	PURPOSE OF THE STUDY	1
2.	A MODEL OF THE ACQUISITION OF SCIENTIFIC AND TECHNICAL INFORMATION	1
2.1	RDT&E Processing	1
2.1.1	Tasks	1
2.1.2	Task-related Information Flow	2
2.2	Objectives of this Study	4
2.3	Information Chunks	6
2.4	Sampling Procedure	6
3.	HOW TO SET UP APPOINTMENTS	6
3.1	General	6
3.2	Interview Substitutions	6
4.	METHOD OF CONDUCTING THE INTERVIEW	7
4.1	General	7
4.2	Introductory Speech	8
4.3	Structure of Interview Guide	9
4.4	Utilization of the Interview Guide	10
4.5	Introductory Guide Data	12
4.6	Part I — Respondent Profile	13
4.7	Part II — Analysis of Task Information	15
4.7.1	Isolating and Describing the Task	16
4.7.2	Analysis of the Information Chunks	20
4.8	Part III — Utilization of Information Centers	28
4.9	Part IV — General Information Patterns	29
4.10	Part V — Subjective Comments of the Interviewer	29
4.11	Part VI — Subjective Evaluation of the Task and Task Output	30

APPENDIX A

APPENDIX B

APPENDIX C. INTERVIEW GUIDE

LIST OF ILLUSTRATIONS

Figure	Title	Page
1.	RDT&E Processing	3
2.	Information Flow Model	5
3.	Retrieval Time	24
4.	Information Time	25
5.	Depth of Subject Matter	25

LIST OF TABLES

Table	Title	Page
1.	Typical Task Conclusions	2

1. PURPOSE OF THE STUDY

One of the principal tasks of the Department of Defense is research and development leading to the production of particular weapons systems. These research and development (R&D) efforts involve searching for and utilizing astronomical amounts of scientific information. It has been estimated that scientific knowledge is doubling every ten years. As a result, increasing amounts of research and development effort are wasted in searching through these growing mountains of information.

The problem, therefore, is to channel the pertinent information to interested personnel as efficiently as possible. But, in order to devise a system for more efficient delivery of this information, there must be insight into the information use patterns of these personnel. The aim of this study is to provide that insight, that is, to determine how Department of Defense scientists and engineers obtain and use scientific and technical information. For this study, the AUERBACH Corporation has developed an interview guide for use in interviewing approximately 1,500 personnel randomly selected from the DOD Research, Development, Test and Evaluation (RDT&E) population. The interviews will average about two hours in duration and will be semi-structured in nature.

Data from the interview will be recorded on the interview guide in both quantitative and narrative form. The quantitative information will be punched on cards and entered into electronic data processing equipment. With this tool, AUERBACH and DOD information specialists will search the quantitative data for significant patterns of information acquisition and usage, for each segment of the RDT&E population. Invaluable supplementary information from the narrative comments will clarify the meaning of the quantitative information and reveal new patterns that could not be recorded in the more rigidly structured quantitative portion of the guide.

2. A MODEL OF THE ACQUISITION OF SCIENTIFIC AND TECHNICAL INFORMATION

In order to put the survey of "How Scientists and Engineers Acquire and Utilize Information" on a firm footing, a number of definitions and assumptions have been made. These definitions and assumptions have, in turn, been based on a conceptual model of certain phases of scientific and technical processes.

2.1 RDT&E Processing

Each DOD person, who may be classified as a research, development, testing or evaluation person, is embedded in a constant flow of information. Furthermore, his work covers a wide variety of activities. The following ideas concerning the activities of these persons and the information flowing to these people are basic to the assumed model.

2.1.1 Tasks. The work performed by an RDT&E person can be divided into two parts. One part consists of a series of specific "tasks"; the other part consists of activities which may indirectly benefit the task processing or the man's professional abilities but are not specifically a part of the effort of a task.

In this sense a task may be defined as a series of processes performed by the person (usually in his head, but often with the assistance of laboratory equipment or scratch paper, etc.) which leads to some conclusion. In general the conclusions of a task bear upon larger projects or studies being carried out for the benefit of the Department of Defense. Many tasks start by recognition of a number of technical alternatives (perhaps not clearly defined) and end by narrowing the number of alternatives to be considered in some subsequent task (or upon which action will be taken). Tasks may be part-time or full-time and may or may not be continuous in time.

Figure 1 summarizes these ideas. The task-related technical processing is envisioned as a process undertaken by a scientific or technical person which involves scientific and technical inputs, and other inputs, and results in conclusions or outputs contributing to the technical activities of DOD. Table 1 is a list of possible typical task conclusions.

TABLE 1.

TYPICAL TASK CONCLUSIONS

Recommendation
Finding
Answer
Conclusion
Result
Request for Action or Further Study
Order for Action or Further Study
Determination
Specification
Design Parameter Selection
Decision
Termination of an Effort

A task starts with some recognition (possibly vague) of a need to reach a conclusion or to produce some output. During the task the person recognizes a need for information and searches for or requests searches for the information. This information will be referred to as "chunks" of information. During the processing of this task the person receives information both as a result of specific requests and "accidentally." Finally, after his analysis, study, or decision process is completed, a conclusion is reached.

2.1.2 Task-Related Information Flow. It is assumed that the information flowing to an RDT&E person can also be divided into two parts. One part bears specifically on tasks he is performing; the other part is used to maintain an awareness of the current state of technical areas of interest, to educate himself, to brush up on previously known areas, and to stimulate his thinking.

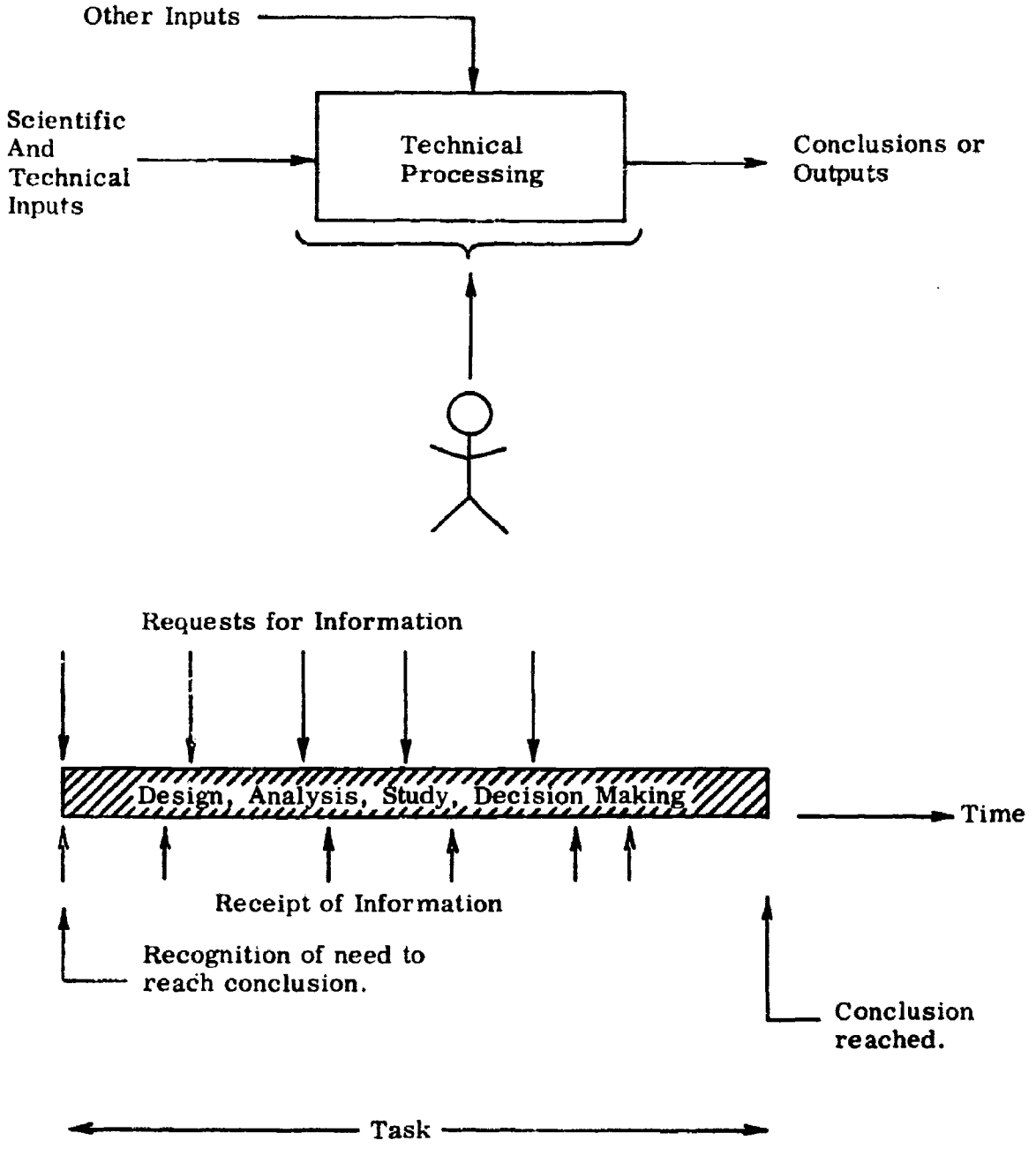

Figure 1. RDT&E Processing

Figure 2 illustrates these two flows. The current awareness flow (in the broad sense described above) emanates from general information sources, which include oral as well as written transfers. The person accepts and observes some of this material. He may remember, in his head, some of the information or references to information. He may extract some of the information or references from the flow of current awareness to put in a personal store.

When the person recognizes the need to reach a conclusion (that is, to initiate a task), additional information flows are incurred (illustrated in Figure 2). First a certain amount of information may be presented to the person along with the task assignment; however, some tasks are self-generated. Next, the person may remember a portion — often all — of the information required to perform the task or he may remember references to appropriate information. He may turn to his personal store and either directly or by searching find information or references.

Finally, he may initiate searches into the general information sources for information required to perform his task. These information sources include his own library, laboratory, conversations with colleagues, etc., as well as formal information centers.

In addition, the RDT&E person may extract from the flow of current awareness information, specific information which he then uses in the then ongoing task. We say that this is information "accidentally" encountered, but it is still defined as task-related.

2.2 Objectives of This Study

In the principal part of this study we are concentrating on the information wanted and used to perform specific tasks, as just described. We are not directly concerned with the flow of current awareness information nor with the indirect transfer between the current awareness and task-related needs.

To study this transfer, as illustrated by M in Figure 2, one would have to depend upon a person's remembering the relationship between information or references he uses for a specific task and the way in which he discovered that information from the current awareness flow. People remember that they found information and can use it, but do not remember where or when they learned the piece of information.

Therefore, the study concentrates on identifying the information used by the person in performing a specific task. It also concentrates on trying to obtain an estimate of the information which the man felt he wanted to perform the task, even though some of the "wants" were not fulfilled. A number of questions are then asked about each chunk of information required to perform the task, other than those recovered from his head. This last limitation is made since people do not usually distinguish between chunks of information recovered mentally and the process of analysis and decision-making itself. Furthermore, the basic purpose of this study is to concentrate on the externally-supplied information required to perform tasks.

(Separate interviews may be undertaken in the future to analyze the current awareness flow and certain aspects of the transfer between current awareness flow and task-related information inputs.)

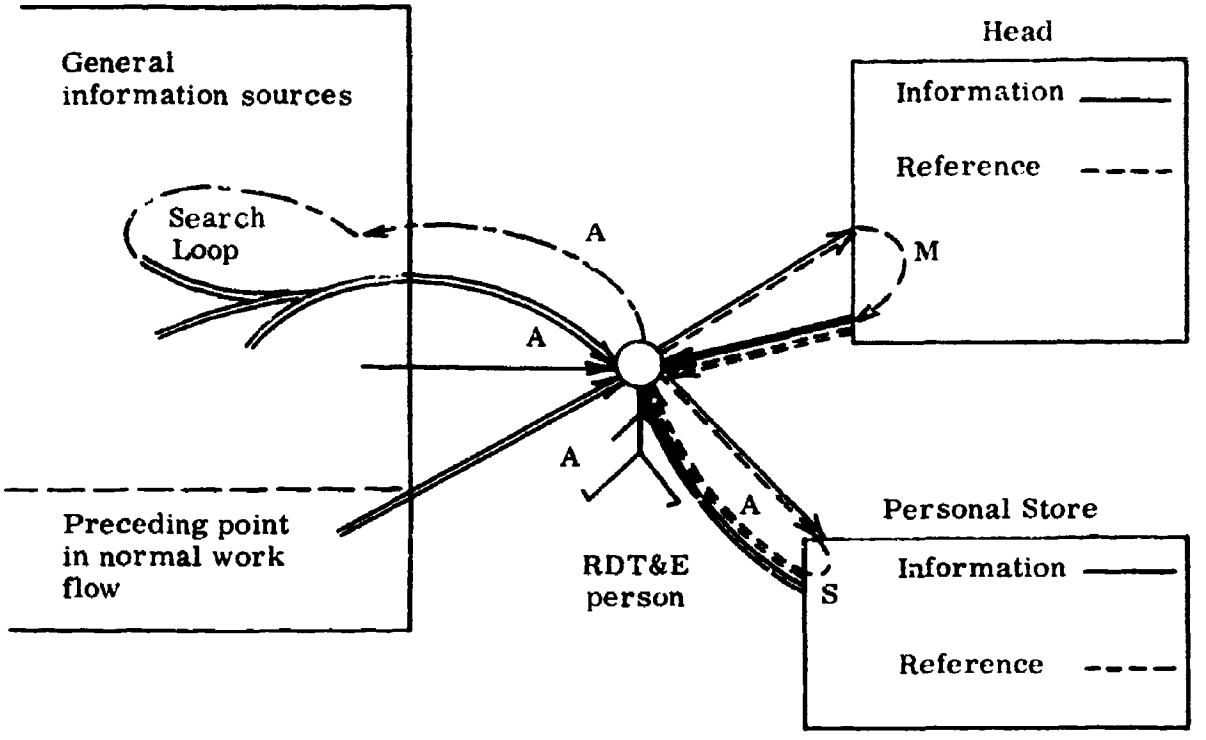

Current Awareness, Education, Brush-up, Stimulation, etc. Flow

Task Related Flow

Search Requests

A: flows studied in detail on this project.
M: depends upon memory.
S: search in personal store.

Figure 2. Information Flow Model

2.3 Information Chunks

Having identified a task, it is next desirable to identify the chunks of information which are required to perform the task. A chunk of information is not related to a medium or method of transmission of information, but refers truly to "information." For example, the boiling point of water is a piece of information, whether found in a handbook, in a textbook, or by asking a colleague. Some chunks of information, such as "the state of the art in underwater propulsion," must be discovered by compilation from a number of physical sources, including journal articles, technical reports, and presentations, etc. Yet all this information would be called one chunk of information.

2.4 Sampling Procedure

Obviously the ultimate goal is to sample a number of tasks performed by DOD and to analyze the information needs for them. One would then extrapolate from the sample to the entire population of DOD tasks being performed. The tasks obviously must be studied through the media of the persons performing them and basically, therefore, a sample of RDT&E people is involved.

3. HOW TO SET UP APPOINTMENTS

3.1 General

To establish an appointment with a respondent, proceed through the following steps:

(1) After receiving the respondent's name and address, send out the DOD news release, and the letters (Appendix A) requesting an interview.

(2) Call respondent two or three days prior to the interview. Introduce yourself and ask if the respondent received the letter. Arrange for a specific time during the specified day. If the respondent is absolutely unable to schedule an interview during that day, keep after him. When discussing the necessity for the interview with a reluctant or antagonistic respondent, be pleasant but firm.

(3) If major difficulty is encountered in scheduling an interview and the interviewer is certain he cannot overcome the obstacles, call the project engineer.

3.2 Interview Substitutions

Under no conditions will you ever select a substitute for an unavailable respondent. Substitutes will be named only by the Project Engineer. If it is a matter of the respondent not being available on a particular day, it is up to you to arrange a later date. Substitutions should be requested only in cases where interviews are impossible at a reasonable, future date.

4. METHOD OF CONDUCTING THE INTERVIEW

4.1 General

(1) Interview at the respondent's work station unless his supervisor or subordinates are too near: in this case, use a conference room, but return to the work station when feasible for a check of any information he mentioned using and indicated was stored there.

(2) Adhere as closely as possible to the standard introduction.

(3) Use a friendly approach to relax the respondent and produce more information. (However, in difficult cases remember that you have a right to be there.)

(4) Try not to put words into the respondent's mouth. If you know anything about the respondent's field, conceal it; otherwise, you might unconsciously lead the respondent to shade his answers or skip important comments.

(5) Do not rush. In some rare cases, it may be necessary to return for a supplementary interview.

(6) Try not to reveal any appraisal of the respondent, his job, or his performance. The respondent may react to the image of himself which he believes you possess.

(7) Try to learn standard abbreviations and code names, such as PL 313, ASW, DD 613, ECM, etc., but do not hesitate to ask the meaning of any that you do not know.

(8) If the respondent requests some detailed information from you, e.g., about the survey, diplomatically ask him to wait until the conclusion of the interview. The information might affect his answers.

(9) Listen for the respondent's use of the words "we" and "usually." The interview guide is aimed at the personal information patterns of the respondent, not his organization. Therefore, be careful when he lapses into use of "we," meaning his organization. He may also lapse into generalizations signaled by frequent use of "usually" or "generally;" make certain he is speaking about the specific task or information chunk.

(10) Retain control of the interview. Do not let the respondent wander from the immediate question unless specifically useful information is obtained. Avoid his usual tendency to expound at length on what his organization is doing.

(11) Make sure that the only persons present during the interview are the interviewer and respondent; all others including the respondent's supervisor and colleagues are to be excluded.

(12) Avoid all exposure to classified information, even if the respondent should offer it.

(13) Do not be overly concerned when it is not possible to obtain the details of a classified task or information "chunk." Determine only the field and general nature of these items. If the task is completely classified, refer to it as TASK "X."

4.2 Introductory Speech

Good Morning (Afternoon). My name is _____. You will recall that I contacted you earlier by phone (letter) requesting this interview which you confirmed. I certainly appreciate your cooperation.

(If you can find a pretext, discuss some neutral subject such as: facilities, location, weather, have coffee, etc. After man appears to relax — but don't wait too long — go on.)

My purpose in visiting you is part of a survey to investigate the utilization of scientific and technical information within the Department of Defense. We are doing this for the Director of Defense Research and Engineering and perhaps these letters will make clear our purpose. (Show the respondent the letter from Koether with associated memo. Do not assume, however, that he has absorbed what he has read.)

As you probably know, Mr. _____, there has been considerable concern in the past few years about how information is gathered and disseminated throughout the Department of Defense, and how inadequacies in this dissemination system are affecting the overall efficiency of DOD's activities. Before drastic steps are taken to revise the information system, DDR&E felt it wise to try to understand more exactly how scientists acquire and utilize technical (scientific, if a scientist) information. The principal method for analyzing the need and use for scientific and technical information is this survey. I am with the AUERBACH Corporation, which as you have read in the letters, has a contract to execute this survey and help in analyzing the results. AUERBACH Corporation is a consulting firm in the information and computer field.

The results of the survey will be used to guide future efforts to design better information systems. We hope the result will be to channel to people such as yourself the proper technical information more rapidly and effectively. A report on the survey results is due about the end of the year.

As you realize, the acquisition and utilization of information by a scientist (engineer) is a complex and highly personal process. We know that surveying and studying this process is difficult. However, with your cooperation, I think we can get at information that will be useful in improving information flow. To do this, we are first going to determine what information you needed to perform a specific task, and then we would like to have your comments on your usual problems in obtaining technical information.

There are about 35,000 research, development, test and evaluation personnel in the DOD community. We have selected about 1,500 of these on a purely random basis, and it was in this way that your name was chosen. We are, of course, in no way attempting to evaluate you or your job. As you will see, we are principally interested in determining the kinds of information you need to perform specific tasks. As Mr. Brown's memo indicates, we will not record your name on our survey form at any point.

Before we begin to discuss your job, let me give you a quick idea of the sequence of the interview. First, I would like to discuss this (his) organization and your job within it. Second, I would like to focus upon a recent task or study which you have accomplished. Perhaps we will be able to identify this task by identifying a particular output which you have produced within the past few weeks. An output may be a paper, a presentation, a report, even a telephone call of significance. The interview will then continue by discussing the technical information you needed to accomplish this task. Third, we will ask a few questions about your use of government information and data centers. Fourth, and last, I will ask generally what difficulties you usually encounter when looking for scientific or technical information.

(Pause to see if the respondent has any question.)

So, let's start by reviewing the function of this organization (name his organization, if you know it).

(Guide the conversation into what the respondent does. Do not continue too long on a discussion of the organization before you direct him to discuss his own job and its outputs.)

As soon as the last completed output is identified, start on the questions.

4.3 Structure of Interview Guide

The attached interview guide consists of five basic parts: (I) respondent profile; (II) analysis of information concerning a recently completed task; (III) utilization of Defense Documentation Center (DDC) and specialized DOD information and data centers; (IV) difficulties usually encountered in obtaining technical information; (V) subjective comments of the interviewer; (VI) evaluation of task and task output. A more detailed breakdown of the guide would be:

I. Respondent Profile (questions 1 - 11)

A. Personal data (questions 1 - 8)

B. General job description (transition questions 9 - 11)

II. Analysis of Task Information (questions 12 - 48 and 93, 94 and 95)

A. Isolate the task (question 12)

B. Task data (questions 12 - 23, and 93, 94 and 95)

C. Isolate the task information chunks (question 24)

D. Chunk data (questions 25 - 47)

III. Utilization of Information Centers (questions 49 - 53)

A. Use of TAB and DDC (questions 49 - 51)

B. Use of specialized information and data centers (questions 52 and 53)

IV. General Information Patterns: Difficulties usually encountered in obtaining technical information (questions 56 - 58)

V. Subjective Comments of Interviewer

VI. Subjective Evaluation of Task and Task Output

As previously mentioned, the objective of the interview guide is to sample RDT&E tasks and to determine the types of information needed, not the types and numbers of media (e.g., journals, texts) required.

4.4 Utilization of the Interview Guide

For proper use of the guide, it is necessary to define five terms around which the guide was designed: (1) project, (2) task, (3) chunk, (4) source, and (5) scientific or technical information. Although some of these terms have been discussed earlier, additional examples and descriptions of their interrelationships are necessary.

The word "project," is never mentioned in the guide but it almost always crops up during the interview. The project is usually a long term job of many months or years duration, and it usually involves the direct full-time efforts of more than one person. Examples are: development of a radar dome (protective cover for radar antenna); determination of the X-ray radiation from the sun; development of the complete specifications for a counter-insurgency aircraft. The larger projects can usually be easily identified because they are funded by their names. Projects are made up of "tasks."

The respondent will have completed many tasks; however, the particular one of interest to the interviewer is the most recently completed task that meets the following additional three criteria:

(1) It required a total of at least eight full hours of the respondent's efforts.

(2) It involved technical considerations.

(3) It has a tangible, clearly identifiable output such as a technical report or an oral briefing.

Usually, the duration of a task will not be over six months. Examples of a task are:

(1) Determine which of five likely plastics would satisfy the wind resistance requirements of a radar dome.

(2) Select the correct type of transistor to be used as a sense amplifier in a computer memory.

Tasks require one or more segments of information called "chunks." A chunk is a limited amount of information; for example, one chunk might be the manufacturer's recommendations on how to bond five likely plastics to a simulated radome skeleton; a very small chunk would be the breakdown voltage of an insulator; a large chunk would be the complete data on fallout from firing NIKE "X" anti-missile missiles. The term "chunk" does not in any way refer to the type or quantity of information packages, i.e., media, to be used; it does not indicate whether the information came from one journal or from 50 texts. The name of the chunk simply describes the type of information, not the means of transmitting it.

The "source" is the person or organization which furnished the chunk to the respondent. Just as there may be many tasks to a project, and many chunks for a task, so there may be many sources for a chunk. An example of one source would be a manufacturer's representative who orally indicates how the plastic sheets should be bonded to the radome skeleton. Rarely would media (e.g., journal, text) be considered a source unless there is no obvious person or organization who furnished the media.

A fifth term, "scientific or technical information," is also a key phrase in this study. Scientific or technical information refers to non-administrative knowledge or data used to accomplish a task in engineering, science, or in the technical utilization of an object. Scientific or technical information includes overviews as well as detailed information used in research, design, development, testing, evaluation, or other technical tasks. It does not include cost or funding information unless that information relates closely to a scientific or technical effort. For the sake of brevity, scientific or technical information is frequently referred to in this study as "technical information."

There are some general observations and recommendations concerning the use of the guide:

(1) There are three types of guide questions:

(a) Questions to guide the discussion; these have no blanks or blocks to fill.

(b) Questions with narrative blanks.

(c) Questions with narrative blanks, and blocks to be filled with numbers.

(2) No more than one letter or number should be entered in any block. If several choices seem to fit the situation, choose the best and enter it. If none of the multiple choices seems to fit, either leave the block empty and explain the omission in the narrative blanks below the question, or enter the choice that fits best. Qualify any special cases by remarks in the narrative blanks.

(3) The narrative blanks are also to be used to indicate new or novel insight that would not normally be brought out by the guide's questions. The narrative blanks, however, are not for recording running commentary; the entries should be only for concise notes or answers.

(4) Since the task is the nucleus of the study, it is imperative for the interviewer to determine the names of all the information chunks pertinent to the task even though he may not have time to investigate all these chunks in detail.

(5) Once the information chunks have been identified, the chunk details should be investigated sequentially, not in parallel. This means, for example, the interviewer must first ask questions 25 to 47 for Chunk I; he then repeats these same questions for each of the following chunks.

(6) The reverse side of the guide pages is filled with lines for informal note taking. In general, the information recorded on the reverse side will not be analyzed by anyone other than the interviewer. This lined side is a scratch pad for his convenience. It permits the interviewer to record noteworthy comments while the respondent relates them. After the interview is concluded, the interviewer reviews these notes for significant points,which are then condensed and recorded in alpha, numeric,or narrative form on the question side of the sheet. Much of the time the interviewer should be able to fill a block immediately after he asks the corresponding question. On the other hand, formal narratives are often entered on the question side of the sheet only after analysis of the informal notes on the reverse side.

4.5 Introductory Guide Data

At the top of page 1 of the interview guide, make certain that the "date of the interview" is always in the sequence of month, day, and year.

The "Name of Facility and Location of Interview" is the installation and the nearest city.

4.6 Part I — Respondent Profile

The "Mil/GS Rating" blank (Question 1) asks for the military rank (e.g., Lt. Colonel) or civilian rank (e.g., GS-15) held by the respondent.

The "Number Technical Personnel Supervised at Present" blank (Question 3) is the number of technical semi-professionals (e.g., technicians but not handymen) and professionals (e.g., scientists and engineers) who report immediately to the respondent. This is the exact number supervised at present, not the average over a period of time. If the respondent has a staff position and has no one reporting to him, the blank would contain a zero. In this particular case, be extremely careful not to embarass the respondent by accenting the fact he has no one reporting to him.

The "Highest Degree and Field" blank (Question 4) is the degree officially held by the respondent and the area of the degree (e.g., B.S. in electrical engineering). Even if the respondent is within very short striking distance of a higher degree, disregard it and list only the degree he actually has; however, be tactful in determining this fact.

The "Job Title" blank (Question 6) is the formal word name of the respondent's position (e.g., Chief, Steam Propulsion Branch), as carried on the official DOD organization chart.

"MOS or Job Code" blank (Question 7) is the military or civil service number code for the respondent's primary job. Frequently this will be a number in the 800 or 1300 series. Do not confuse this military or civil service number code with the office or mail code.

In answering Question 8, the respondent is to indicate how long he has been working in his present technical area (e.g., described by his DDC field and section.) It is oriented toward the types of projects on which he has worked recently; e.g., the design of ordnance fuzes. This question does not relate to the time he has spent at a given management or engineering level.

Since Questions 1 through 8 are of a personal nature, it is best to ask them near the end of the interview after rapport has been established.

Usually, the interview starts with Questions 9 through 11. These are to be answered by the respondent's informal oral description of his job. An abbreviated narrative version of this description is entered at the bottom of page one. The letters A, B, or C for Question 9 each indicate a particular type of respondent activity. The appropriate letter is entered in the number 9 block at the right. The activities are one way of describing his job in general, and are defined below:

TYPE OF ACTIVITY

A. Detailed Scientific or Engineering — requires in-depth technical expertise in a particular area(s) of research, development, test, and evaluation. Technical capability which requires more than just an overview or moderately detailed knowledge of a scientific or engineering area.

B. Technical Evaluation — requires at least a moderately detailed knowledge of an area, for judging the merits and weaknesses of a project, plan, or proposal. Does not include individuals engaged primarily in design or research who evaluate projects, plans, or proposals only occasionally. Includes individuals engaged almost full time in monitoring contractor progress (e.g., project officer) or evaluating proposals.

C. Technical Administration — where 90 percent or more of the work day is spent on work involving no technical considerations. Some small portion of the work day — up to 10 percent — does require some technical knowledge, often no deeper than an overview.

If, in answer to question 9, the respondent indicates he is a full time administrator requiring no technical knowledge at all, the interviewer should classify him as "Other," i.e., "D," and elaborate in the narrative section at the bottom of the page. The interviewer must double check and be certain, however, when such a case occurs. Seldom is no technical knowledge required.

Question 10, "KIND," provides the interviewer with a second way to describe the respondent's job in general. Choices A through E are based on the DOD "Hitch method" of defining scientific and technical areas. The description of each of the seven "Kinds" is given below. The letter for the appropriate kind is entered in the number 10 box at the right. If the respondent holds positions in two or more of these "KIND" classifications, always analyze only his primary job.

KIND

A. Research — Includes all effort directed toward increased knowledge of natural phenomena and environment and efforts directed toward the solution of problems in the physical, behavioral, and social sciences that have no clear, direct military application. It would, thus, by definition, include all basic research and, in addition, that applied research directed toward the expansion of knowledge in various scientific areas. It does not include efforts to prove the feasibility of solutions to problems of immediate military importance or time-oriented investigations and developments.

B. Exploratory Development — Includes all effort directed toward the solution of specific military problems, short of major development projects. This type of effort may vary from fairly fundamental applied research to quite sophisticated bread-board hardware, study, programming, and planning efforts. It would thus include studies, investigations, and minor development effort. The dominant characteristic of this category of effort is that it may be pointed toward specific military problem areas with a view toward developing and evaluating the feasibility and practicability of proposed solutions and determining their parameters.

C. Advanced Developments — Includes all projects which have moved into the development of hardware for experimental or operational test. It is characterized by line item projects, and program control is exercised on a project basis. A further descriptive characteristic lies in the design of such items being directed toward hardware for test or experimentation as opposed to items designed and engineered for eventual Service use. Examples are testbeds such as: an experimental Hydrofoil and the X-15.

D. Engineering Developments — Includes those development programs being engineered for Service use but which have not yet been approved for procurement or operation. For example: MAULER, TYPHON, B-70. This area is characterized by major line item projects.

E. Operational System Developments — Includes research and development effort directed toward development, engineering and test of systems, support programs, vehicles, and weapons that have been approved for production and Service employment. This area is included for convenience in considering all RDT&E projects. All items in this area are major line item projects which appear as RDT&E Costs of Weapons Systems Elements in other Programs.

F. Reliability-Quality Control — Includes maintaining the quality of a product by using mechanical and mathematical sampling and measuring techniques.

G. R&D Support — Includes research and development effort toward support of installations or operations required for general research and development use. Included would be test ranges, and maintenance of test aircraft and ships. Military Construction costs directly related to a major development program will be included in the appropriate element. Examples of Research and Development Support are: calibration of nozzles used in a wind tunnel; the design of a piece of general test equipment such as a chronograph that is to be used by laboratory personnel, not by field forces, to measure the speed of an artillery shell.

Question 11 allows the interviewer to describe the respondent's general job in terms of a DDC (ASTIA) field. The most appropriate of 33 possible fields (e.g., Chemistry Guided Missiles, etc.) is chosen from the DDC Distribution Guide Reprint, March 1964.

4.7 Part II — Analysis of Task Information

Part II is the heart of the interview. It selects the most recently completed task and analyzes the "chunks" of information inputs which were necessary for performing that task.

4.7.1 Isolating and Describing the Task. The chief problem of the interviewer in Part II is selection of the task, a function which he must not leave to the respondent. The interviewer always selects the most recently completed task which meets the following three criteria:

(1) It must involve technical considerations. A valid task, however, may not have a technical output; for example, the case of developing a budget requiring technical knowledge of the project(s) involved, but resulting in no technical output. On the other hand, the mere mechanics of writing a technical report is not a suitable task because no analysis or manipulation of technical information is required.

(2) It must have consumed at least eight man-hours of the respondent's work effort. These eight hours may have been spread over a long period of time.

(3) It must have a clearly identifiable, tangible output; oral outputs are acceptable.

The strategy in Part II is to ask a series of three basic questions which, first, discover the respondent's latest activities, second, discover his most recently completed task, and, third, verify that this task was his most recently completed one. These three questions form a skeletal structure for other detailed questions framed on-the-spot by the interviewer.

Specifically, the suggested procedure for isolating the task follows this sequence:

(1) Ask the first basic question, "Briefly, could you tell me what you have been doing in the last few days?" The purpose of this question is to give the interviewer a good opportunity to identify the proper task before he formally asks the respondent to name it. This minimizes the possibility that the interviewer will feel obligated to use the task chosen by the respondent even though he, the interviewer, doubts the wisdom of the choice. After the respondent begins discussing his present activities, the interviewer works back in time from the present, until he thinks he has a task. During this discussion, the interviewer attempts to isolate the task by informally asking probing questions to determine if the potential task: is the most recently completed which: (a) involved technical considerations, (b) required eight hours of the respondent's effort, and (c) has a tangible, i.e., identifiable output.

(2) After the interviewer believes he has the task isolated, he confirms it by asking the second basic question, "What is the most recent task you completed?" This requires giving the respondent a brief definition of "task" by simply listing the task criteria. If necessary, the interviewer

should emphasize that the task is not to be necessarily representative of the respondent's usual tasks. After the respondent has named the task, the interviewer asks for a very brief description of it and determines that it is only a task and not a sizable project.

(3) Ask the third basic question, "Since you finished this task, what have you been doing? " The question is a check to verify that no acceptable task has been completed after the one already selected.

A task may have several outputs. Once the task has been selected, it is very important to determine the major output. The term "major" means the output requiring the most preparation effort on the part of the respondent. Identifying the major output of the task is essential before proceeding with the balance of the interview, especially question 14, and questions 19 through 23. This major output of the task is to be considered as part of the overall task and, therefore, must have been completed as required by one of the task criteria previously outlined.

Questions 12 and 13 require recording the number of the DDC (ASTIA) task field and the section, using as reference the DDC Distribution Guide Reprint, March 1964.

Question 14 asks for the "KIND" of major output from the task. Although Questions 14 and 10 have the same list of choices, the choice selected in Question 14 may be considerably different from the choice describing the respondent's general job in Question 10 on page one. For example, an astronomer may be listed as engaged in "research" on page one; however, his most recent task may have consisted of developing a device to assist him in this basic research. Therefore, the "kind" of task would be "R&D Support," choice G. For the definitions of the "KIND" choices in Question 14, refer to the list described earlier for Question 10.

Questions 15 and 16 determine if the task was assigned to the respondent by someone else, if the respondent himself generated the task, or if it was a joint decision arrived at by the respondent and someone else. This query was broken into two questions in order to avoid directly contrasting the choices of "assigning" and "self-generated." This direct contrast might imply that the respondent who generated his own task was superior to the respondent who did not. Descriptions of the key terms in these questions are given below:

Assigned — Where a superior specifically gives to the respondent the responsibility for completing this particular task.

Self Generated — Where the respondent is primarily responsible for the decision to carry out this task. "Self-generated" also includes tasks that automatically arise as a normal part of the respondent's general duties, or as a consequence of a broad directive by the respondent's superior. For example, suppose the respondent's supervisor tells the respondent to find some means of increasing the range of a

rocket; assume also the respondent decides to undertake a task which determines if aluminum grain additives to the solid propellant will give added thrust to obtain the desired increase in range. The task of testing aluminum additives would be "Self-Generated" because the respondent's supervisor did not specifically indicate that aluminum additives were to be investigated.

Joint — Where the decision to undertake a task is arrived at by the mutual agreement of the respondent and his superior or by the respondent and one or more colleagues.

Question 17 actually consists of two questions which determine the duration of the task in number of days, weeks, or months. The first question establishes when the task was assigned or decided upon by the respondent. The second question determines when the task output was completed. The answers in month, day, and year are recorded in the empty area immediately to the right of the questions. This empty area serves as a scratch pad for computing the duration which is entered in the two blocks at the extreme right of the questions. The right hand block is for the letter indicating the units of time: day, week, or month. The letter code to be entered in these blocks is any one of the following three:

D — for days

W — for weeks

M — for months

The number of days, weeks, or months' duration is entered in the left hand block. For example, a task lasting five weeks would be recorded as:

5 / W

Question 18 determines what percentage of the respondent's own eight hour work day was spent working on the task during the period indicated in Question 17. If the respondent should phrase his answer in terms of hours, it is up to the interviewer to translate this into a percentage.

Question 19 asks for more detail on the physical form of the task's major output. The answer is to be a brief, one line description; for example, "a five page technical report," "a series of twelve detailed design drawings," or "a formal oral briefing."

Question 20 asks if the purpose of the task's major output was a finding, recommendation, or decision. These three choices are described as:

Finding — a simple recording of the facts discovered in an investigation, with no specific recommendation to act on any of the alternatives presented. For example, one

finding determined that there are two feasible methods for generating electricity to power a particular communications satellite; these methods are thermoelectric and thermonuclear.

Recommendation — a suggestion to follow one of a number of alternatives. An example would be a respondent's advice to use the thermonuclear source of electricity for the satellite.

Decision — a conclusion to take action or not take action on a recommendation from others or on findings generated, and deliberated over, by the respondent himself. An example of a decision is the conclusion to order immediate development of a thermonuclear generator.

The interviewer should be careful not to offend the respondent by implying the respondent made only a "recommendation" while the respondent insists it was a "decision."

Question 21 determines if the principal form of the major output was oral or written. Since virtually all tasks involve at least some minor oral communication of the output, the emphasis in this question is on the principal form. Examples of oral task outputs are an informal briefing by a superior or a formal address before a professional society. Examples of written task outputs are a lengthy formal letter, a technical report, or a journal article.

Question 22 determines if the form of the task's major output was formal or informal. Formal outputs are highly structured and require appreciable time to prepare; examples are:

(1) technical reports,

(2) well planned briefings or addresses before large groups of people,

(3) lengthy, organized memoranda or correspondence.

There are usually no preparatory efforts to rigidly structure or outline the informal outputs. Examples of informal outputs are:

(1) a telephone conversation to convey a recent finding,

(2) a one paragraph, handwritten note to a colleague indicating a decision to build the prototype of a collapsible fuel storage cell.

Question 23 determines if the output was directed to circles within the DOD community, or outside DOD. The DOD community includes all government organizations under the direct control of the Secretary of Defense. The term, "outside DOD" refers to all

governmental and private groups not under the line supervision of the Defense Secretary. The objective of Question 23 is to learn if the chief audience toward which the output is directed — and not necessarily the first person who officially receives the output — is inside or outside the DOD complex.

4.7.2 Analysis of the Information Chunks. Once the task has been isolated and discussed, the next step is to determine what "chunks" or segments of scientific or technical information were needed to perform the task. It must be emphasized that the "chunk" is a description of the type and quantity of information, and not the physical package or media (textbook, journal, etc.) in which the information comes. A particular chunk, regardless of its type, size or complexity, may come in one or in a thousand varied media. The chunk and media have no direct relationship. Examples of chunks of information are:

(1) the availability of large quantities of five different strategic materials for use in jet turbine blades,

(2) the characteristics of an aluminum alloy at temperatures above 300 degrees F., or

(3) fuel consumption curves for an Army truck.

Question 24 introduces the request for chunks. The five unnumbered questions that follow simply serve as "memory joggers" to insure that the respondent recalls every information chunk used in the task. The specific responses to these unnumbered questions are never recorded — only the chunks of information they reveal. We are not really interested in which chunks came with the task, which were obtained informally, or which were wanted at the beginning of the task, but were not obtained by the end of the task; some of this information is obtained by later questions, but it is not a consideration for Question 24.

As the chunks are listed, the interviewer writes them on the worksheet area of the page facing the question sheet. When the total list of the chunks is established, the interviewer asks the respondent to rank them in order of importance; the Roman numeral system is used for the ranking. The final list of chunks may be entered under Question 24 after conclusion of the interview. The interviewer must keep a close eye on the clock. He should analyze about three chunks in detail at first, pass on to Parts III and IV, and then return to analyze more chunks if he has the time available. In any event he should be able to analyze at least three chunks.

Question 25 determines the class, DDC (ASTIA) field, and DDC section (subfield) of each information chunk. The definitions of each class follow. The letter for no more than one class is to be entered in the appropriate one of five chunk blocks at the right of the sheet. If the chunk appears to contain more than one class, pick the predominant class and enter that letter in the block. The same rule for no more than one entry is carried through the remainder of the entire interview guide. If the interviewer cannot resolve this problem of multiple choices, he should either mark the letter for "other" or leave the block empty. In either case, he should explain why in the lined area below the question.

CLASSES OF INFORMATION CHUNKS

(Question 25)

Concepts — theories, ideas, broad technical plans, or general relationships. For example, the plan for lunar orbit of manned spacecraft preparing to ascend to the moon, or the theory of relativity.

Cost and Funding — the allocation or expenditure of money in support of a technical effort. For example, budget data for the coming fiscal year, or for the development of a new land mine.

Design Techniques — detailed approaches or procedures employed in combining ideas, and the techniques of converting these combinations into plans and models.

Experimental Process or Procedure — the method, or sequence of events followed in preparing and performing an investigation where the results are predicted theoretically, and not with absolute certainty. Experimental processes and procedures may either be generally established ways of setting up or conducting experiments, or they may be one-of-a-kind. An example is the procedure for conducting a wind tunnel experiment to determine the drag on a model of a new supersonic aircraft configuration.

Math Aids and Formulae — theorems, equations, or formulae considered as standard information by accepted authorities, and used as tools in calculations. For example, the formula for the area of a circle, a constant such as π, fixed tables such as logarithms, or Ohm's law of $E = IR$.

Performance and Characteristics — observed data or qualities of an object in terms of what it is or how well it performs. Examples are: "high wing monoplane," "a measured speed of 825 knots." Performance and characteristics indicate the actual nature or capability of an object, not the design objectives of the object (i.e., not specifications).

Production Process or Procedures — the method or sequence of events involved in the duplication of an object.

Raw Data — unprocessed and uncorrected data which are the primary record of a scientific or technical measurement or event. For example, a graphical record of telemetry data exactly as it appeared when it was radioed from a rocket; a high speed photograph of the shock waves produced by a projectile.

Specifications -- primarily quantitative descriptions of how well an object is expected to perfor. . Examples of specifications are: "The proposed aircraft must cruise at 1000 knots," "... the chassis is to withstand shock of 40 g's," "... it is required that the computer be able to operate in an environment of -50 degrees to + 100 degrees C." Specifications are theoretical expectancies, not what an object is or can do (i.e., performance characteristics.)

Technical Status or Progress -- the present condition, accomplished to date or state of the art in a scientific or technical area or project. For example, a quarterly progress report detailing the accomplishments in the development of a new rocket propellant.

Test Process or Procedure -- the method or sequence of events involved in determining the characteristics, capabilities or limitations of an object which has been produced in quantity. For example, a procedure for conducting desert trials of a production model of an Army tank, or procedures for evaluating durability of common textiles.

Utilization -- the scheme for employing material or equipment in particular situations; where and how an object functions within a system. Utilization may also include the procedures employed by personnel in operating a system.

Questions 26 and 27 require recording the number of each DDC (ASTIA) Chunk field and Chunk section, using the same reference for Questions 12 and 13.

Question 28 determines which media conveyed the chunks, and the quantity of each medium. For example, the record for Chunk I, the most important, might appear as:

I — 3 journals + two conversations with colleague.

Chunk II might appear as:

II — one technical report + two textbooks + two folders from personal files.

Question 29 determines if the respondent habitually uses the persons or media named in Question 28. The key word "habitually" means with predictable regularity. Question 29, therefore, actually asks if the respondent will regularly use these media or persons if he is after the same type of chunk.

If the respondent did not usually use these media or persons for the given type of chunk, he is to indicate, by chunk numeral in Question 30, what he does use habitually. The entries under Question 30 are more specific than those under Question 28. Assume that the respondent obtained a description of the mechanical properties of nylon from a

person or media not named in Question 28. The entry under Question 30 then might appear as:

III – plastics specialist in the organization's "Materials Testing" branch; technical report from U.S. Army, Plastics Technical Evaluation Center, Picatinny Arsenal, Dover, N.J.; DuPont plastics catalog.

Question 31 asks if the respondent would have preferred the chunk in any physical arrangement or package other than the one he received. If the response is in the affirmative or even anything approaching a neutral position, the interviewer is to show the respondent the 3 x 5 card listing the various types of arrangements and ask his preference. In this question, a few of the arrangements require some elaboration:

C. Informal oral – person to person, word-of-mouth communication with no rigid structure. For example, an over-the-coffee-cup technical conversation with a colleague.

D. Formal oral briefing – a structured word-of-mouth talk or address to a group of persons. For example, an address by a contractor explaining new design concepts in a ground effect machine.

E. Live demonstration – a real life reenactment. For example, actual firing of a nuclear powered rocket engine to display the durability of a new reactor metal.

F. Microfilm – usually 35 mm filmstrips, or

Microfiche – a small transparent sheet of film about 5 by 8 inches and containing many 16 mm frames – in some cases as many frames as a microfilm, (or equivalent "Micro" forms.)

G. Slides or motion pictures – including 35 mm slides, lantern slides, overhead project transparencies, 16 mm and 35 mm motion pictures.

H. Correspondence and memos – long, formal letters, short interoffice memos, and very brief handwritten notes.

Questions 32 and 33 are companion questions to determine what the respondent received and what he wanted. They measure the number of different opinions or collections of data on a given chunk of information; they do not refer to the size of the body of knowledge. The particular number of different opinions or data sought on a given chunk is indicated by one of the choices: (A) "one good report containing all the information," (B) "a sampling of the information available," (C) "all the material that could be found pertinent to the

question," and in Question 32 (D) "nothing." Suppose,in reply to Question 33, the respondent indicated he wanted "one good report ..." on laser design details. This means that the respondent wanted only one authority's detailed design knowledge of the laser field. "A sampling of the information available" would mean that the respondent wanted different laser design data from several sources, for example, to compare the designs. "All the material that could be found pertinent to the question" would mean that the respondent was looking for all the available detailed design reports and items in the field of lasers. Again a reminder that all the choices in Questions 32 and 33 deal with a given chunk and therefore with a fixed scope of subject matter. These questions measure the extent of the searching required.

The selection of choice "C" (all pertinent material) in Questions 32 and 33 indicates the respondent probably got or wanted large amounts of information. Question 34 determines if title listings or abstracts would have been of material assistance in shortening the search for this pertinent information. After Question 34 is asked, the respondent may indicate he is not familiar with either the abstracts or title listings; in this case, the interviewer should show him the two samples provided. The "yes" choices in this question (B, C, D) indicate which or both of the two forms were desired. Choice (E) indicates the respondent had no preference when choosing between title listings and abstracts. Choice (F) indicates the respondent already used either or both title listings and abstracts.

Questions 35 and 36 relate to retrieval time, as shown in Figure 3. Starting at the time the respondent requested or began searching for the information (time X), the interview measures, respectively, the ACTUAL time it took to find the majority of it (ending at time "Y"), and the MAXIMUM retrieval time the respondent could have allowed (ending at time "Z") and still performed the task on time.

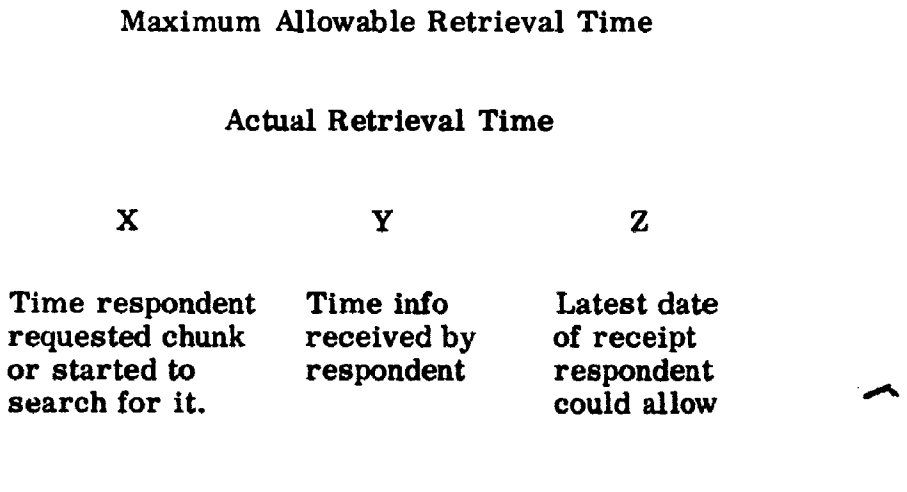

Figure 3. Retrieval Time

Question 37 determines if the respondent wanted the chunk within a few days after it was produced or discovered (Figure 4). This question pinpoints the respondents with urgent need for very new, up-to-date information. The phrase, "... [within] a few days after they were discovered or produced by the originating person" means,for example, no more than a few days after the professional tester observed the performance of a new nuclear weapon or the scientist isolated a new cancer virus.

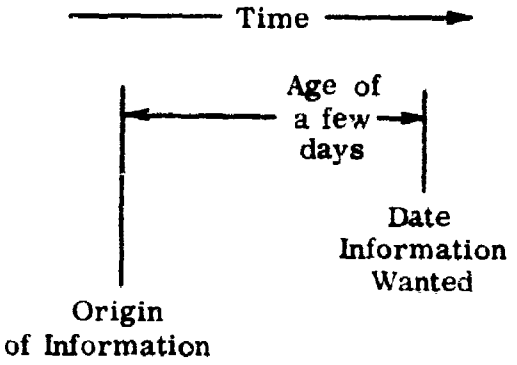

Figure 4. Information Time

The purpose of Questions 38 and 39 is to determine how detailed the information actually was and how detailed the respondent would have liked it. These questions, for the most part, assume a given breadth of subject matter, and measure only depth. "A once over lightly ..." (overview) and "detailed analysis" are both sizable segments of information covering an entire area, such as lasers, or a significant part of it. The difference is that "A once over lightly ..." (Figure 5) is only a skeleton or summary of the highlights while a "detailed analysis" (Figure 5) furnishes the full depth of knowledge required for expertise in at least some phase of the subject, such as performance, feasibility, production technique. A "detailed analysis" is a long chain of interrelated facts. A "specific answer" (Figure 5) is usually only one fact. Examples of overviews are informative abstracts or the summary type of technical articles found in Aviation Week or the Scientific American. An example of a "detailed analysis" is a textbook on the design of electronic waveguides. An example of a "specific answer" is the boiling point of titanium tetrachloride.

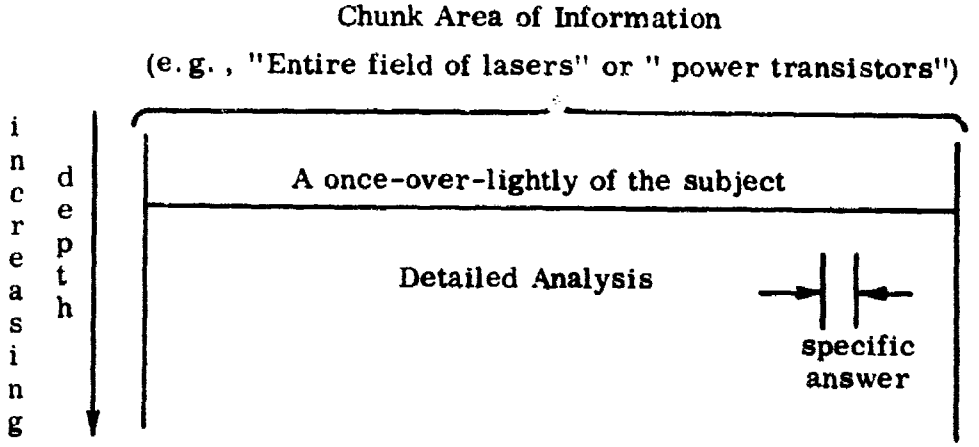

Figure 5. Depth of Subject Matter

Question 40 asks how the chunk was laid out, while Question 41 asks how he wanted it laid out. As indicated by the choices, these questions refer to the physical layout and mode of communication (i.e., the format) within the information package or container. Certain choices for Questions 40 and 41 warrant elaboration:

C. Tables and lists — for example, tables of trigonometric functions, lists of specifications.

F. Graphical and text —

G. Photos and text — the more popular combinations of choices "B" through "E."

H. Graphical and lists —

When asking Question 41, the interviewer furnishes the respondent with a 3 x 5 card, listing these various types of information layout.

Questions 42 through 45 deal with the first source of information for each chunk. Question 42 determines the first person or organization consulted by the respondent in his search for the chunk (other than any mental search he may have made). Since most choices in the question are self-explanatory, the following descriptions cover only a few of the choices:

B. Supervisor — in this case, the supervisor of the respondent.

D. Consultants (outside) — a specialist brought in and paid, directly or indirectly, to solve or advise on a particular problem: this specialist is usually not a member of DOD.

E. Colleague — a co-worker, usually professional, and not semi-professional such as a technician. The colleague is usually in any DOD agency, and that agency may or may not be the same as that of the respondent. The colleague may also be employed outside DOD: for example, by a contractor.

J. Information or Data Centers — organizations established to answer specific scientific and technical queries or requests for documents. Examples are the Defense Documentation Center and the Battelle Defense Metals Center.

Question 43 determines the principal reason behind the respondent's using this source for the chunk. Several of the choices require elaboration:

A. Received with task assignment — information chunk was provided respondent at the time he was given the task.

B. Most authoritative — the first source was considered by the respondent as the preeminent expert.

C. Only source known — was the one and only source the respondent knew. If the first source was the only one known, this choice should be the one recorded even though the source was, by default, obviously also the "most authoritative" and the handiest ("availability").

D. Availability (handy) — the first source was the easiest one to consult — often by virtue of its physical proximity or as a habit.

E. Recalled from mind that specific chunk was available from this source — stored in the respondent's head was the recollection that he could obtain the chunk from this first source. In this case the interviewer should attempt to find out and record how the respondent learned of this reference.

F. Found helpful previously — the respondent satisfactorily gained information from this first source at some prior date.

Question 44 determines the exact words used to interrogate the first human source or the procedures used for interrogation if the source was inanimate. The exact words — minus social chit-chat — or the exact procedures as related by the respondent are to be recorded. If the source was an object, such as a library card catalog, the interviewer is to determine what questions were to be satisfied by the card catalog, and what terms the respondent expected to find in the card catalog.

Question 45 determines how much of the information chunk the respondent got from the first source. The choice determines whether the first source: (A) provides the respondent with the complete chunk; (B) gives the respondent only part of the chunk; (C) guides the respondent to the information elsewhere; or (D) furnishes nothing.

Questions 46 and 47 no longer refer to the first source; they return to the entire chunk. Question 44 measures the importance of the chunk in completing the task. It provides the choices: (A) absolutely essential to task (indispensable); or (B) the respondent could somehow have completed the task without it (not indispensable).

Question 47 determines the manner in which the information was used: (A) as working level information used directly in completing the task; (B) as background material; (C) as a lead to other information; or (D) not at all. The interviewer will always select choice (A) if the information is used directly in the task, regardless of whether or not it also served as background material or as a lead to other information.

Question 48 determines if the respondent discovered, after the task was completed, some information that would have been useful, and that was available but unknown to him during the task. Note that this question relates to the total task, not to a chunk. If the respondent answers question 48 in the affirmative, the interviewer should note in the "comments" section, what type and quantity of information was discovered and how important it was to the task completion.

Question 95, which was added after the field interviewing began, is intended to qualify and round out Question 48. It is essentially self explanatory and is recorded in actual number of days since the task was completed.

4.8 Part III — Utilization of Information Centers

This section of the interview guide is aimed chiefly at learning why the respondent does or does not use DDC or the DOD specialized information and data centers.

Question 49 measures how often the respondent comes in contact with TAB, the DDC Technical Abstract Bulletin which is issued twice each month. The degrees of frequency are:

A. almost every issue

B. about once every two or three months

C. no more than once every six months

D. never reads TAB; of course if the respondent does not know of TAB (E), he never reads it; however, NEVER mark (D) unless the respondent knows of TAB and has some reason for not reading it. This eliminates the possibility of choosing both (D) and (E) in the same interview.

E. does not know of TAB

Questions 50 and 51 ask why the respondent does or does not use DDC. The negative choices in Question 51 which need further explanation are:

B. Physical location — the respondent feels, rightly or wrongly, that DDC or its field information centers are too remote from him.

C. Red tape — there are too many administrative obstacles and too much paper work.

D. Security — excessive safeguards and proof of need-to-know associated with classified materials.

E. Time — excessive retrieval time.

F. Not relevant — materials are not pertinent to the respondent's needs.

Questions 52 and 53 ask why the respondent does or does not use the DOD specialized information and/or data centers. These two questions are structured exactly like Questions 50 and 51 which inquire about DDC. When the interviewer asks Question 52, he shows the respondent the list of specialized information centers shown in Appendix B.

The purpose of Questions 54 and 55 is to check the use of the foreign technology abstracting and translation services made available by DOD. After the interviewer asks these questions, he returns to page one to complete the respondent's profile.

4.9 Part IV — General Information Patterns

Whereas Part II concentrated on the information needs for one task, Part IV is a deliberate attempt to generalize about the respondent's information problems over the past year. Part IV returns will constitute a very important supplement to the Part II responses.

A running commentary of the answers to Part IV questions should be recorded on the lined worksheet. After conclusion of the interview, the pertinent comments are condensed and entered under the Part IV questions.

Question 56 determines if the respondent had any major problem locating scientific and/or technical information. If the reply is "Yes," the interviewer is to detail the nature of the difficulty, Question 57, and proposed solutions offered by the respondent, Question 58. For example, a respondent might indicate that he always has had a serious problem selecting an appropriate type of transistor for a new electronic circuit. Further probing might reveal that the real cause of this problem is the respondent's inability to keep his own manufacturers' catalogs up to date because of the constant flood of addenda and announcements from the various suppliers. His proposed solution might be to have all manufacturers' catalog data collected by a central agency which would compile the data and regularly publish it in one handy package.

The interviewer is encouraged to probe in great depth in Part IV. If more space is needed for formal comments, he may use the reverse side of the last Interview Guide sheet.

4.10 Part V — Subjective Comments of the Interviewer

Question 59 asks for an appraisal of the respondent's general needs for external technical information. The first choice, "Has a very large need ..." means the respondent usually secures an exceptionally large amount of his input information from external sources; the respondent usually considers the sources essential for accomplishing most tasks. The term "external" means sources outside the immediate work environment. For example, "external" sources would be DDC, remotely located libraries with which the respondent is not familiar, personnel in other agencies with whom he has infrequent contact. Examples of sources and documents which are not external are the respondent's own files, a favorite text on a colleague's desk, his departmental library, documents he frequently consults in a local university, or documents he stores in his home.

The choice, "Has moderate need..." means the respondent relies on external sources for a significant but not exceptional amount of information; these sources often are not absolutely essential for successfully completing his tasks.

4.11 Part VI — Subjective Evaluation of the Task and Task Output

Question 93 is a synthesis of the three unnumbered questions on page 3a (see Interview Guide). It represents a subjective evaluation of how well the specific task would potentially fit into a man-machine relationship in the sense that the task might have been programmed and accomplished in some automated fashion. The answers to the three questions are used by the interviewer to aid him in evaluating the task into one of four categories. One of the key factors in making this evaluation is the professional knowledge or intellect needed to perform the task. The three unnumbered questions on page 3a are to be completed during the normal course of the interview process in the field. Question 93 is to be derived at the completion of the field interviews by each interviewer, based upon the following four category descriptions.

Category	Description
1	The task can possibly be mechanized. There is essentially one obvious or prescribed method to use or procedure to follow to conclude the task. It was quite clear and obvious how the task was to be accomplished, and it required a relatively low order of intellect to produce or to conclude the task. An example of such a task would be a telegraph key operator who performs a rather routine type of task along with prescribed procedures.
2	Task difficult to mechanize. The choice of procedures or methods required in order to conclude the task required very little professional knowledge or judgment. It was fairly clear and obvious how the respondent was to accomplish the task and it required a modest amount of intellect to draw the task to a successful conclusion.
3	Task very difficult to mechanize. The choice of methods to proceed to the conclusion of the task required some professional knowledge in order to be successful. There was considerable intellect and professional judgment required to conclude the task successfully. By and large this category includes those tasks of an analysis or of an evaluation nature.
4	Impossible to mechanize. There were no methods or procedures in existence to follow to bring the task to a conclusion. It was not at all clear or obvious where or how the respondent should obtain his information. The output of the task generally involved the creation of new information. There was a great deal of intellect and professional knowledge required to conclude the task successfully.

Question 94 on page 3a is a subjective analysis of the output of the task. The multiple-choice replies were determined on the basis of the following criteria:

(1) What was the essential nature of the output of the task?

(2) Did the task essentially produce results if the outputs were an analysis? (Possible results are listed.)

(3) With which topic (if any) was the analysis principally concerned? (Several choices are listed.)

APPENDIX A.

Sample Letters

information sciences and technology

AUERBACH
corporation
1634 arch st.
philadelphia
penna. 19103
locust 3-7737

April 21, 1964

Mr. John Doe
David Taylor Model Basin
Carderock, Maryland

Dear Mr. Doe:

You have been selected to participate in a DOD study of how RDT&E personnel acquire and use scientific and technical information. Reproductions of letters from Dr. Harold Brown, Director of Defense Research and Engineering, and from Mr. Fred Koether, Director of Technical Information, ARPA, are enclosed explaining the purpose and importance of this study.

In order to utilize most effectively the time allowed for the project, we would like to have Mr. Joseph Smith interview you at your office beginning at 0830 for approximately two hours on 30 April 1964.

Because of the difficult scheduling problem, we ask that you give priority to the date and time requested for your interview. If it is impossible for you to comply with this schedule, please notify my office as soon as possible so that an alternate time may be arranged. You can reach me by calling collect Philadelphia LO 3-7737, extension 85.

Your cooperation in this matter is greatly appreciated.

Sincerely,

AUERBACH Corporation

H. F. Sieber, Jr.
Project Engineer

HFS:jvb

Encls.

DIRECTOR OF DEFENSE RESEARCH AND ENGINEERING
WASHINGTON 25, D. C.

9 January 1964

MEMORANDUM FOR The Assistant Secretary of Defense (Civil Defense)
The Assistant Secretary of Defense (Comptroller)
The Assistant Secretary of Defense (I&L)
The Assistant Secretary of Defense (ISA)
The Assistant Secretary of Defense (Manpower)
The Assistant Secretary of the Army (R&D)
The Assistant Secretary of the Navy (R&D)
The Assistant Secretary of the Air Force (R&D)
Chief, Defense Atomic Support Agency
Director, Defense Communications Agency
Director, Defense Intelligence Agency
Director, National Security Agency

SUBJECT: DoD Study of Users of Technical Information

The Office of the Director of Technical Information, through the Advanced Research Projects Agency, is sponsoring a contract with the Auerbach Corporation of Philadelphia, Pennsylvania, to study how DoD technical people use scientific and technical information.

In this connection the Auerbach Corporation will conduct personal interviews with selected personnel conducting research, development, test and evaluation throughout the Defense establishments. People to be interviewed will be selected from a random sampling of the DoD scientific and technical population. They will be interviewed at their desks, and their names will not be identified with the interview results. The survey will be conducted on an unclassified basis.

A pilot survey will be conducted in the Washington, D. C. area beginning 15 February 1964 and ending 15 March 1964. The main survey will be conducted from the middle of April through the middle of October and will cover all Defense establishments in the Continental United States.

It will be necessary for the contractor to arrange appointments with personnel who are selected in the sample. I would be grateful for your cooperation in calling this important survey to the attention of all of your components engaged in RDT&E work and urging them to assist the contractor in carrying out the interviews.

HAROLD BROWN

cc: The Director, ARPA
Deputy Directors, DDR&E

ADVANCED RESEARCH PROJECTS AGENCY
WASHINGTON, D.C. 20301

Gentlemen:

This letter introduces _____,
an employee of the AUERBACH Corporation, Philadelphia, Pennsylvania, which has been retained by the Advanced Research Projects Agency of the Department of Defense under contract number SD-219, to conduct a study of scientific and technical data use. This study is to explore how scientific and technical information is acquired and used by Department of Defense scientists and engineers who are engaged in research, development, test and evaluation.

The above named person is entering this installation for the purpose of conducting a number of interviews with specific people whose names have been randomly selected from the total population of Department of Defense personnel classified as working in research, development, test and evaluation. It is my wish that you extend him all the courtesy and assistance he might require to accomplish his assignment.

Sincerely,

Fred A. Koether
Director,
Technical Information

1 Incl:
DDR&E Memo
9 January 1964

APPENDIX B.

Some Specialized Information/Data Centers

1. BALLISTIC MISSILE RADIATION ANALYSIS CENTER
   Institute of Science and Technology
   Ann Arbor, Michigan
2. LIQUID PROPELLANT INFORMATION AGENCY
   The Johns Hopkins University
   Silver Spring, Maryland
3. POWER INFORMATION CENTER OF THE INTERSERVICE GROUP FOR FLIGHT VEHICLE POWER
   Philadelphia 4, Pennsylvania
4. THE SOLID PROPELLANT INFORMATION AGENCY
   The Johns Hopkins University
   Silver Spring, Maryland
5. U.S. ARMY ROCKET AND GUIDED MISSILE AGENCY, TECHNICAL LIBRARY
   Redstone Arsenal, Alabama
6. U. S. ARMY ENGINEER WATERWAYS EXPERIMENT STATION, RESEARCH CENTER
   Vicksburg, Miss.
7. U.S. NAVAL OBSERVATORY, NAUTICAL ALMANAC OFFICE
   Washington 25, D.C.
8. HIBERNATION INFORMATION EXCHANGE
   c/o Office of Naval Research
   Chicago 1, ill.
9. U.S. ARMY, DEPARTMENT OF RADIOBIOLOGY
   Walter Reed Army Medical Center
   Washington 12, D.C.
10. U.S. ARMY, NATIONAL INDEX OF FUNGUS CULTURES
    Pioneering Research Division
    Natick, Mass.
11. JOINT ARMY-NAVY-AIR FORCE THERMOCHEMICAL DATA
    Midland, Mich.
12. BATHYTHERMOGRAPH DATA PROCESSING AND ANALYSIS, OCEANOGRAPHIC DATA ARCHIVES
    La Jolla, Calif.
13. CLIMATIC CENTER, USAF, AIR WEATHER SERVICE (MATS)
    Washington 25, D.C.
14. NATIONAL OCEANOGRAPHIC DATA CENTER
    Washington 25, D.C.
15. VELA SEISMICS INFORMATION AND ANALYSIS CENTER
    Ann Arbor, Mich.
16. ADVISORY GROUP ON ELECTRONIC PARTS
    Philadelphia 4, Pa.

17. ARMED FORCES PEST CONTROL BOARD
Walter Reed Army Medical Center
Washington 12, D.C.

18. ARMED FORCES INSTITUTE OF PATHOLOGY
Washington 25, D.C.

19. U.S. ARMY ORDNANCE, HUMAN ENGINEERING LABORATORY
Aberdeen Proving Ground, Md.

20. DEFENSE METALS INFORMATION CENTER
Columbus 1, Ohio

21. INFORMATION SERVICE IN SILICATE SCIENCE
Toledo 6, Ohio

22. NATIONAL ACADEMY OF SCIENCES, PREVENTION OF DETERIORATION CENTER, NATIONAL RESEARCH COUNCIL
Washington 25, D.C.

23. U.S. ARMY, PLASTICS TECHNICAL EVALUATION CENTER
Picatinny Arsenal
Dover, N.J.

24. LOGISTICS RESEARCH PROJECT, GEORGE WASHINGTON UNIVERSITY
Washington 25, D.C.

25. U.S. ARMY, MATHEMATICS RESEARCH CENTER
University of Wisconsin
Madison 6, Wis.

26. U.S. AIR FORCE, AIR INFORMATION DIVISION
Washington 25, D.C.

27. ARMED FORCES-NATIONAL RESEARCH COUNCIL COMMITTEE ON VISION
Washington 25, D.C.

28. DEFENSE LOGISTIC SERVICES CENTER
Battle Creek, Mich.

29. INDEX OF SPECIFICATIONS AND STANDARDS (DODISS)
Naval Supply Depot
Philadelphia, Pa.

30. FOREIGN TECHNOLOGY DIVISION OF AFSC
Wright Patterson AFB
Dayton, Ohio

31. FOREIGN SCIENCE AND TECHNOLOGY CENTER, U.S. ARMY
Washington, D. C.

32. DIVISION OF MISSILE INTELLIGENCE
Army Missile Command
Huntsville, Ala.

33. LAWRENCE RADIATION LABORATORY
Livermore, California

APPENDIX C.

INTERVIEW GUIDE

Revised and Reprinted May 14, 1965

Date of Interview _____ Interviewer's Name _____ 99 ☐

Time Interview Began _____ Name of Facility and Location of Interview _____

Time Interview Ended _____ 98 ☐ _____

PART I RESPONDENT PROFILE

1. MIL/GS Rating _____ 2. Year of Birth _____ 3. Number Technical Personnel Supervised at Present _____

4. Highest Degree and Field _____ 5. Year Obtained _____

6. Job Title _____

7. MOS or Job Code _____

8. How long have you been doing this type of work? _____

9-11 In a few words, would you tell me what you PERSONALLY do? _____

9 TYPE OF ACTIVITY	10 KIND	11 FIELD	
A. Detailed Scientific or Engineering	A. Research		9 ☐
B. Technical Evaluation	B. Exploratory Development		
C. Technical Admin.	C. Advanced Development		
D. Other (Specify)	D. Engineering Development		10 ☐
	E. Operational System Development		
	F. Reliability - Quality Control		
	G. R&D Support		11 ☐
	H. Other (Specify)		

NARRATIVE DESCRIPTION OF RESPONDENT'S JOB:

_____

_____

_____

_____

_____

_____

_____

_____

PART II

ANALYSIS OF TASK INFORMATION

Note to Interviewer: In the following sequence of questions, if the respondent has done nothing recently, or if the task if less than eight hours, or if there are no technical considerations in the task, work back in time until you find a concluded task that satisfies the task criteria.

Now let us focus upon the work you have recently completed.

(a) Briefly, could you tell me what you have been doing in the last few days?
(b) What is the most recent task you have completed?
(c) Since you finished this, what have you been doing?

NARRATIVE DESCRIPTION OF TASK:

13. Note to Interviewer: Record the field and section of the task.

96
Field Section
12 [ ][ ] 13

14. What was the kind, or level, of the major output of the task?

A. Research
B. Exploratory development
C. Advanced development
D. Engineering development
E. Operational development
F. Reliability - Quality Control
G. R&D Support
H. Other (Specify)

14 [ ]

15. Was the task assigned?

A. Yes (skip to 17)
B. No

15 [ ]

16. If the task was not assigned, how did it orginate?

A. Self generated
B. Joint decision
C. Other

16 [ ]

17. What was the date you personally started this task?
What was the date you completed this task?

No. Unit
17 [ ][ ]

On the average, what percentage of your own personal time was devoted to this task?

A. 20% or under
B. 40% or under
C. 60% or under
D. 80% or under
E. 100% or under

18 [ ]

19. Could you describe in more detail the physical form or forms of the major output of the task?

20. Was the major output of the task (A) a finding, (B) a recommendation, or (C) a decision? 20 [ ]

21. Was the major output of the task (A) oral, (B) written, or (C) other? 21 [ ]

22. Was the major output of the task (A) formal or (B) informal? 22 [ ]

23. Was the major output directed (A) to or within DOD or (B) outside DOD? 23 [ ]

94. Evaluate and record the output of the task according to both the general definitions of the classes of the chunks plus the amendments below. The evaluation should be conducted along the vein of "Was the essential nature of the output A, B, C, etc.," or "Did the task essentially produce A, B, C, etc.?" In the case of an analysis type of output, the choice should be made within the framework of, "Was the analysis principally concerned with A, B, C, etc.?"

A. Concepts
B. Cost and funding; administrative action
C. Designs or design techniques
D. Experimental processes and procedures
E. Math aids and formulae; computer programs
F. Performance and characteristics
G. Production processes and procedures
H. Raw data
I. Specifications
J. Technical status
K. Test processes and procedures
L. Utilization
M. Other
N. Evaluation

94 ☐

93. At the beginning of the task was there (A) essentially one obvious or prescribed method of use or procedure to follow, (B) a choice of procedures or methods requiring little or no professional judgment, (C) a choice of methods or procedures requiring some professional knowledge to follow successfully, (D) no methods or procedures to follow.

☐

When the interviewee began to address himself to accomplishing this task, was it (A) quite clear or obvious, (B) fairly clear or obvious, (C) not at all clear or obvious, where or how he should go about obtaining the information.

☐ 93 ☐

Would you consider the output of the task: (A) a rearrangement of existing information, (B) an evaluation or analysis, (C) the creation of new information.

☐

Note to Interviewer: In the following sequence of questions, enumerate and discuss all information "chunks" that relate to the previously mentioned task. Record them narratively. Explain to respondent that you are going to then ask a series of questions about how he obtained information, and what information he used on each of these chunks.

24. Now I am going to focus my questions on all the chunks of information you used to accomplish this task. What were these chunks? Would you describe each of them to me?

(a) Which, if any, of these information chunks did you get with this task assignment?

(b) Did any information chunks come to you informally, that is, information you may have gotten orally from a colleague, a phone call, etc.?

(c) Was there any information you wanted at the beginning or during the task that was not obtained by the end of the task?

(d) Were there any other information chunks that you can think of that helped you in this task?

I _____

_____

_____

II _____

_____

_____

III _____

_____

_____

IV _____

_____

_____

V _____

_____

_____

(e) Would you rank them in their order of importance if appropriate?

Note to Interviewer: Record below the class, field, and section of each information chunk.

CLASS

A. Concepts
B. Cost and funding
C. Design techniques
D. Experimental processes
E. Math aids and formulae
F. Performance and characteristics
G. Production processes and procedures
H. Raw data
I. Specifications
J. Technical status
K. Test processes and procedures
L. Utilization
M. Other

		I	II	III	IV	V
Class	25					
Field	26					
97						
Section	27					

28. Would you describe how (name of information chunk) was received by you in terms of media and the quantity of media. By media, I mean the vehicle of the information transmission such as newsletters, journals, texts, etc.

I _____

_____

II _____

_____

III _____

_____

IV _____

_____

V _____

_____

29. Do you habitually use these media or persons to obtain information? By habitual, I mean, do you normally consult these media or persons when confronted with the problem of obtaining this (name of information chunk) kind of information?

A. Yes
B. No
C. Information never found

_____

26-28	A	B	C	D	K	N	P	R	S	T	V	W	Z	RD
01	14 33 6	33 76 8	6 13 10	5 12 5	10 23 8	1 2 13	3 6 6	22 52 9	1 3 3	3 1 4	8 3	1 4	1 2 17	1
02	4 2	19 9 1	4 2 1	6 3 1	9 4 1		4 2 2	28 13 2	9 4 4	4 2 7	11 5 2		2 1 8	
03	9 11 2	17 21 2	5 6 4	7 9 3	10 12 4	1 1 6	13 16 16	18 22 4	9 11 12	1 1 4	9 11 4			
05	25 136 25	26 142 15	4 24 18	10 53 20	7 38 13	1 6 38	2 10 10	13 71 12	2 12 13		10 55 21	1 4 16		-
06	18 27 5	24 36 4	6 9 7	5 7 3	8 12 4		1 2 2	21 32 6	3 5 5	1 2 7	11 16 6	2 3 12		
10	15 15 3	35 36 4	2 2 1	11 11 4	5 5 2		1 1 1	18 18 3	3 3 3		10 10 4		1 1 8	-
11	25 5 1	30 6 1			15 3 1		5 1 1	10 2	5 1 1		10 2 1			
12	10 28 5	37 102 11	2 5 4	3 9 3	12 34 12		1 1	27 75 13	1 4 4	1 3 11	5 13 5	2 5 20		
14	17 47 9	23 63 7	3 8 6	13 34 13	9 23 8	1 3 12	4 12 12	17 45 8	5 13 14		8 21 8			
15		36 4		9 1			18 2 2	18 2	9 1 1		9 1			
16	3 4 1	25 34 4	6 8 6	3 4 2	9 12 4	1 1 6	14 19 19	17 23 4	10 13 14		12 16 6	1 2 8		-
22	22 53 10	30 71 7	6 14 10	3 8 3	10 24 8		1 1	20 48 8	1 2 2	3 7 26	4 10 4		1 8	
25	8 7 1	24 31 3	4 5 4	6 8 3	9 11 4		7 9 9	26 33 6	6 8 9		9 11 4	2 3 12	1 1 8	
26	29 20 4	36 25 3	9 6 4	10 7 3	3 2 1			4 3 1	1 1 1		7 5 2			
30	16 74 14	32 149 16	3 12 9	13 61 23	7 34 12	2 13	2 10 10	14 64 11	1 6 7	1 5 19	10 46 17	1 5 20	1 3 25	-
31	18 14 3	22 17 2	5 4 3	7 5 2	13 10 3			30 23 4	3 2 2		1 1			
34	18 45 8	33 83 9	6 15 11	7 18 7	9 23 8		2 4 4	13 31 5	1 2 2	2 4 15	8 20 8	1 4	1 2 17	
36	11 15 3	36 48 5	1 2 1	10 14 5	12 16 6	1 1 6	1 2 2	14 19 3		1 2 7	10 13 5	1 1 4	1 1 8	
RD OF		- 2	1		1	- 1	2	1	3				1	
TOTAL	16 536 100	29 953 100	4 135 100	8 264 100	9 286 100	16 100	3 98 100	18 576 100	3 91 100	1 27 100	8 264 100	1 25 100	12 100	

S	T	V	W	Z	RD DF	TOTAL
3		3		1	1	100
3	1	8	1	2		232
	4	3	4	17		7
	4	11		2		100
4	2	5		1		47
4	7	2		8		1
	1	9			1	100
11	1	11				121
12	4	4				4
		10	1		- 1	100
12		55	4			551
13		21	16			17
	1	11	2			100
5	2	16	3			151
5	7	6	12			5
		10		1	- 1	100
3		10		1		102
3		4		8		3
		10				100
1		2				20
1		1				1
	1	5	2			100
4	3	13	5			279
4	11	5	20			8
		8				100
13		21				269
14		8				8
		9			1	100
1		1				11
		12	1		- 1	100
13		16	2			136
14		6	8			4
	3	4			1	100
2	7	10		1		239
2	26	4		8		7
		9	2	1		100
8		11	3	1		127
9		4	12	8		4
		7			1	100
1		5				69
1		2				2
	1	10	1	1	- 1	100
6	5	46	5	3		471
7	19	17	20	25		14
		1			1	100
2		1				76
2						2
	2	8		1		100
2	4	20	1	2		248
2	15	8	4	17		8
	1	10	1	1	1	100
	2	13	1	1		134
	7	5	4	8		4
3				1		1
	1	8	1			100
91	27	264	25	12		3283
100	100	100	100	100		100

26-28	A	B	C	D	K	N	P	R	S
01		13	13		25		13	25	
		1	1		2		1	2	
		1	3		4		11	3	
02 21		21		8	8		4	21	
	5	5		2	2		1	5	
	22	7		17	4		11	8	
03		25		8	25		17	17	8
		3		1	3		2	2	1
		4		8	6		22	3	13
05 13		11	13		16			24	
	5	4	5		6			9	
	22	5	16		12			14	
06 6		29	6		6			41	
	1	5	1		1			7	
	4	7	3		2			11	
10		38	25					25	
		3	2					2	
		4	6					3	
12 10		17	7		24			14	
	3	5	2		7			4	
	13	7	6		14			6	
14 11		14	18		32	4	4	4	7
	3	4	5		9	1	1	1	2
	13	5	16		18	100	11	2	25
15		33	8		8			25	8
		4	1		1			3	1
		5	3		2			5	13
16		21	21	7	21		14		7
		3	3	1	3		2		1
		4	10	8	6		22		13
22 4		19	4	7	33			26	
	1	5	1	2	9			7	
	4	7	3	17	18			11	
25		23	13	4	13		3	19	
		7	4	2	4		1	6	
		10	13	17	8		11	9	
26 25		50	25						
	1	2	1						
	4	3	3						
30		32	2	5	>			20	5
		13	1	2	2			8	2
		18	3	17	4			12	25
31 13		13	13	13	13			38	
	1	1	1	1	1			3	
	4	1	3	8	2			5	
34 13		31	19	6	6			19	
	2	5	3	1	1			3	
	9	7	10	8	2			5	
36 9		27					9	27	9
	1	3					1	3	1
	4	4					11	5	13
RD DF	1	1	2		- 2		1	- 2	- 2
TOTAL 7		22	9	4	16		3	20	2
	23	73	31	12	51	1	9	65	8
	100	100	100	100	100	100	100	100	100

26-28	A	B	C	D	K	N	P	R	S	T	V	W	Z	RD DF	TOTAL
01	13 1 1	13 1 3	25 2 4	13 1 11	25 2 3	13 1 7				- 2	100 8 2
02	21 5 22	21 5 7	8 2 17	8 2 4	4 1 11	21 5 8	17 4 29				100 24 7
03	25 3 4	8 1 8	25 3 6	17 2 22	17 2 3	8 1 13					100 12 4
05	13 11 5 22	13 4 5	16 5 16	24 9 14	3 1 7	3 1 14	13 5 16	5 2 67	- 1	100 38 12
06	6 29 1 4	6 5 7	1 3	6 1 2	41 7 11	6 1 7	6 1 3			100 17 5
10	38 3 4	26 2 6	25 2 3	13 1 3	- 1	100 8 2
12	10 17 3 13	7 5 7	24 2 6	7 14	14 4 6	14 4 29	14 4 13			100 29 9
14	11 14 3 13	18 4 5	32 5 16	4 9 18	4 1 100	4 1 11	4 1 2	7 2 25	4 1 7	4 1 33	- 2	100 28 9
15	33 4 5	8 1 3	8 1 2	25 3 5	8 1 13	17 2 6	1	100 12 4
16	21 3 4	21 3 10	7 1 8	21 3 6	14 2 22	7 1 13	7 1 14	2	100 14 4
22	4 19 1 4	4 5 7	7 1 3	33 2 17	9 18	26 7 11	7 2 6	100 27 8
25	23 7 10	13 4 13	6 2 17	13 4 8	3 1 11	19 6 9	6 2 14	10 3 43	6 2 6	1	100 31 9
26	25 50 1 4	25 2 3	1 3	100 4 1
30	32 13 18	2 1 3	5 2 17	2 4	20 8 12	5 2 25	2 1 14	29 12 39	100 41 13
31	13 13 1 4	13 1 1	13 1 3	13 1 8	13 1 2	38 3 5	- 3	100 8 2
34	13 31 2 9	19 5 7	6 3 10	6 1 8	1 2	19 3 5	6 1 3	100 16 5
36	9 27 1 4	3 4	9 1 11	27 3 5	9 1 13	9 1 14	9 1 3	1	100 11 3
RD DF	1	1	2	- 2	1	- 2	- 2	1	2	1
TOTAL	7 23 100	22 73 100	9 31 100	4 12 100	16 51 100	1 100	3 9 100	20 65 100	2 8 100	4 14 100	2 7 100	9 31 100	1 3 100	1	100 328 100

26-28	A	B	C	D	K	N	P	R	S	T	V	W	Z	RD DF	TOTAL
01	5 3 6	42 28 9	2 1 6	3 2 8	14 9 15	5 3 3	23 15 7	2 1 2	6 4 3				- 2	100 66 7
02	5 1 2	14 3 1		19 4 7	5 1 11	14 3 3	24 5 2	10 2 4	5 1 20	5 1 1			- 1	100 21 2
03	8 3 6	18 7 2	3 1 6	5 2 8	3 1 2	3 1 11	20 8 8	20 8 4	8 3 5		15 6 5			- 3	100 40 4
05	6 10 20	30 54 18		1 1 4	6 10 16	2 4 44	8 15 14	27 48 21	5 9 16	1 1 20	13 24 20	1 1 33	1 1 17	- 1	100 178 18
06	4 2 4	23 11 4	6 3 18	6 3 13	2 1 2	4 2 2	30 14 6	6 3 5			17 8 7			2	100 47 5
10	5 2 4	29 12 4		5 2 8	7 3 5	2 1 1	39 16 7	2 1 2	7 3 3	2 1 33			2	100 41 4
11		20 1			20 1 2		20 1	20 1 2	20 1 1					100 5 1
12	4 2 4	36 16 5		2 1 4	16 7 11		29 13 6	2 1 2	11 5 4					100 45 5
14	3 1 2	28 11 4		3 1 4	5 2 3	3 1 11	18 7 7	20 8 4	8 3 5		15 6 5			- 3	100 40 4
15		27 4 1					33 5 5	27 4 2	7 1 2			7 1 33		- 1	100 15 2
16	3 2 4	29 23 7	1 1 6	3 2 8	1 1 2	1 1 11	30 24 23	10 8 4	11 9 16		10 8 7			1	100 79 8
22	6 3 6	28 15 5		2 1 4	6 3 5			30 16 7	2 1 2	2 1 20	25 13 11			- 1	100 53 5
25	2 2 4	33 29 9	1 1 6	2 2 8	3 3 5		23 20 19	17 15 7	13 11 20		2 2 2		2 2 33	2	100 87 9
26	7 3 8	41 18 6	7 3 18			2 1 11	11 5 5	16 7 3	2 4		11 5 4				100 44 4
30	8 10 20	38 49 16	2 3 18	3 4 17	9 12 20		2 3 3	21 27 12	1 1 2	2 2 40	12 15 13		2 2 33		100 128 13
31	10 2 4	19 4 1	5 1 6	5 1 4	5 1 2		5 1 1	33 7 3	5 1 2		14 3 3			- 1	100 21 2
34	5 3 6	30 18 6	3 2 12	3 2 8	5 3 5		10 6 6	15 9 4	10 6 11		18 11 9			1	100 60 6
36		31 5 2	6 1 6				6 1 1	25 4 2			25 4 3		6 1 17	1	100 18 2
RD DF	2		- 2	2	- 2	1	- 1	- 1	- 2		- 1	1			- 1
TOTAL	5 49 100	31 308 100	2 17 100	2 24 100	6 61 100	1 9 100	11 104 100	23 225 100	6 56 100	1 5 100	12 119 100	1 3 100	1 6 100	- 1	100 986 100

This series of seven tables shows the relationship between the field of the task, the field of the information chunk, and the first person or organization contacted to acquire the information. The analysis of these tables indicates that there are no significant relationships between the field of the task, the field of the chunks, and the use of any particular first source to acquire the information.

42A Received with Task FIELD OF TASK vs. FIELD OF CHUNK

12-26	01	02	03	05	06	10	11	12	14	15	16	22	25	26	
01	79 19 58		8 2 9	4 1 1									4 1 3	4 1 8	
02		20 1 25													
03			71 12 55						6 1 6			12 2 5			
05	1 1 3			78 62 72	3 2 10			1 1 3						1 1 8	5
06	5 1 3	5 1 25			64 14 67			5 1 3					5 1 3		9
10				11 1 1		56 5 36						22 2 5			11
11							50 1 100								
12	9 3 9			6 2 2	3 1 5			65 22 71					6 2 6		3
14	10 2 6								62 13 76	5 1 7					5
15				9 1 1		27 3 21		9 1 3		27 3 20	18 2 12				
16			17 4 18								65 15 88		9 2 6		9
22	2 1 3			8 4 5	8 4 29				4 2 12	4 2 13		64 34 79		6 3 23	4
25													77 20 61	4 1 8	15
26												11 1 2		78 7 54	11
30	4 4 12	2 2 50	1 1 5	9 10 12	4 4 19	2 2 14		5 5 16	1 1 6	6 9 60		1 1 2	6 6 18		56
31			4 1 5	4 1 1								13 3 7			13
34			5 1 5	19 4 5				5 1 3					5 1 3		
36	20 2 6		10 1 5												10
RD DF			- 2		- 1			1						- 1	
TOTAL	7 33 100	1 4 100	4 22 100	17 86 100	4 21 100	3 14 100	1 1 100	6 31 100	3 17 100	3 15 100	3 17 100	9 43 100	7 33 100	3 13 100	17

ASK [illegible] FIELD OF CHUNK

between the field of the task, the field of the information chunks, and the first
ormation. The analysis of these tables indicates that there are no significant
d of the chunks, and the use of any particular first source to acquire the

. FIELD OF CHUNK

06	10	11	12	14	15	16	22	25	26	30	31	34	36	RD DF	TOTAL
								4 1 3	4 1 8					1	100 24 5
												80 4 13			100 5 1
				6 1 6			12 2 5						12 2 12	- 1	100 17 3
3 2 10			1 1 3						1 1 8	5 4 5		10 8 27		1	100 79 16
64 14 67			5 1 3					5 1 3		9 2 2			9 2 12	- 2	100 22 4
	56 5 36						22 2 5			11 1 1					100 9 2
		50 1 100										50 1 3			100 2
3 1 5			65 22 71					6 2 6		3 1 1		3 1 3	6 2 12	- 1	100 34 7
				62 13 76	5 1 7					5 1 1	5 1 6	14 3 10		- 1	100 21 4
	27 3 21		9 1 3		27 3 20	18 2 12							9 1 6	1	100 11 2
						65 15 88		9 2 6		9 2 2					100 23 5
	8 4 29			4 2 12	4 2 13		64 34 79		6 3 23	4 2 2	2 1 6			- 2	100 53 11
								77 20 61	4 1 8	15 4 5			4 1 6		100 26 5
							11 1 2		78 7 54	11 1 1					100 9 2
4 4 19	2 2 14		5 5 16	1 1 6	8 9 60		1 1 2	6 6 18		56 60 73			2 2 12	- 1	100 107 22
							13 3 7			13 3 4	61 14 82		4 1 6	1	100 23 5
			5 1 3					5 1 3			5 1 6	62 13 43		- 1	100 21 4
										10 1 1			60 6 35		100 10 2
- 1			1						- 1	2		1	- 1		
4 21 100	3 14 100	1 100	6 31 100	3 17 100	3 15 100	3 17 100	9 43 100	7 33 100	3 13 100	17 82 100	3 17 100	3 30	3 17 100	1	100 496 100

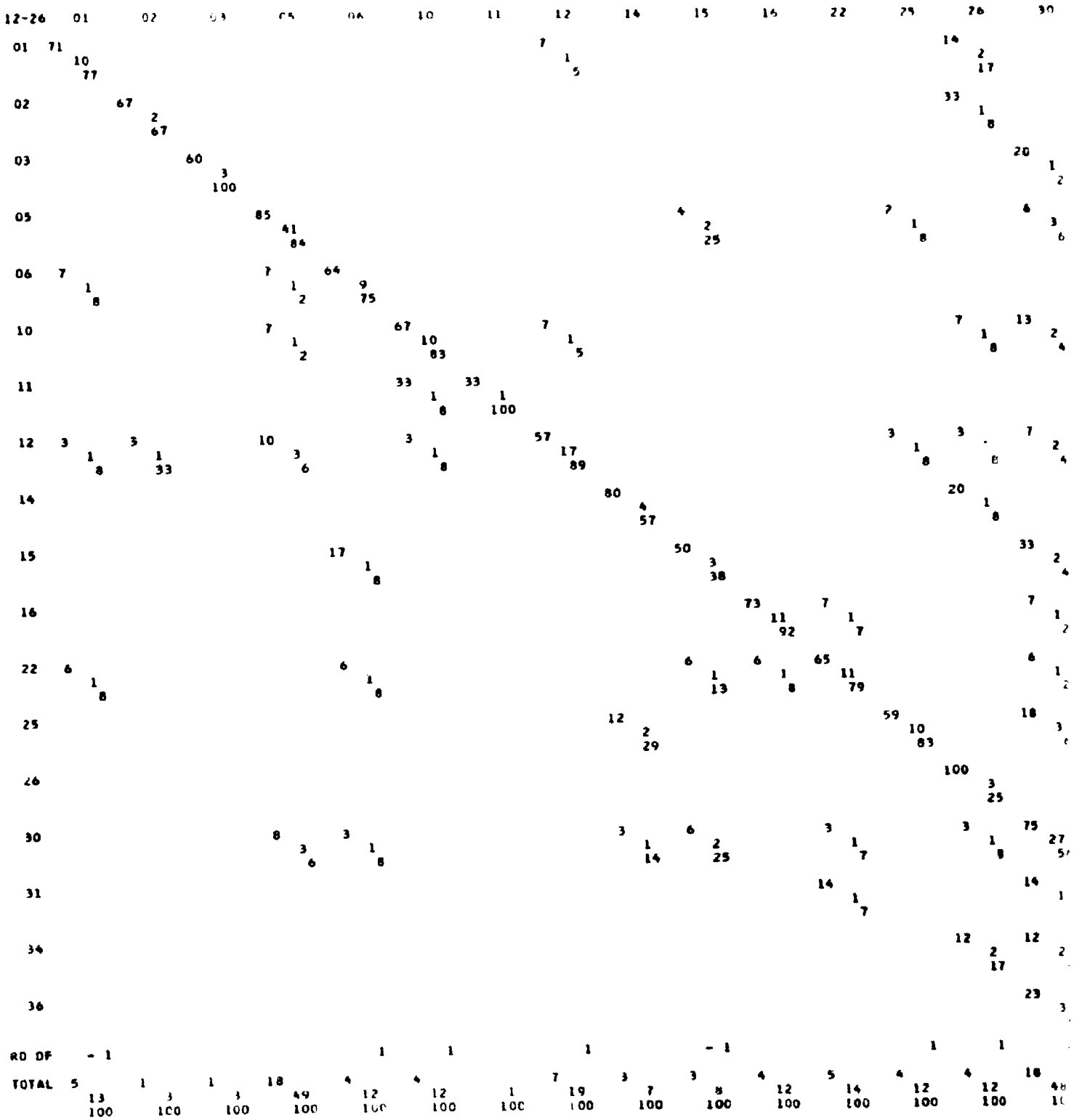
12-26 01 02 03 05 06 10 11 12 14 15 16 22 25 26 30
01
02
03
05
06
10
11
12
14
15
16
22
25
26
30
31
34
36
RD OF
TOTAL

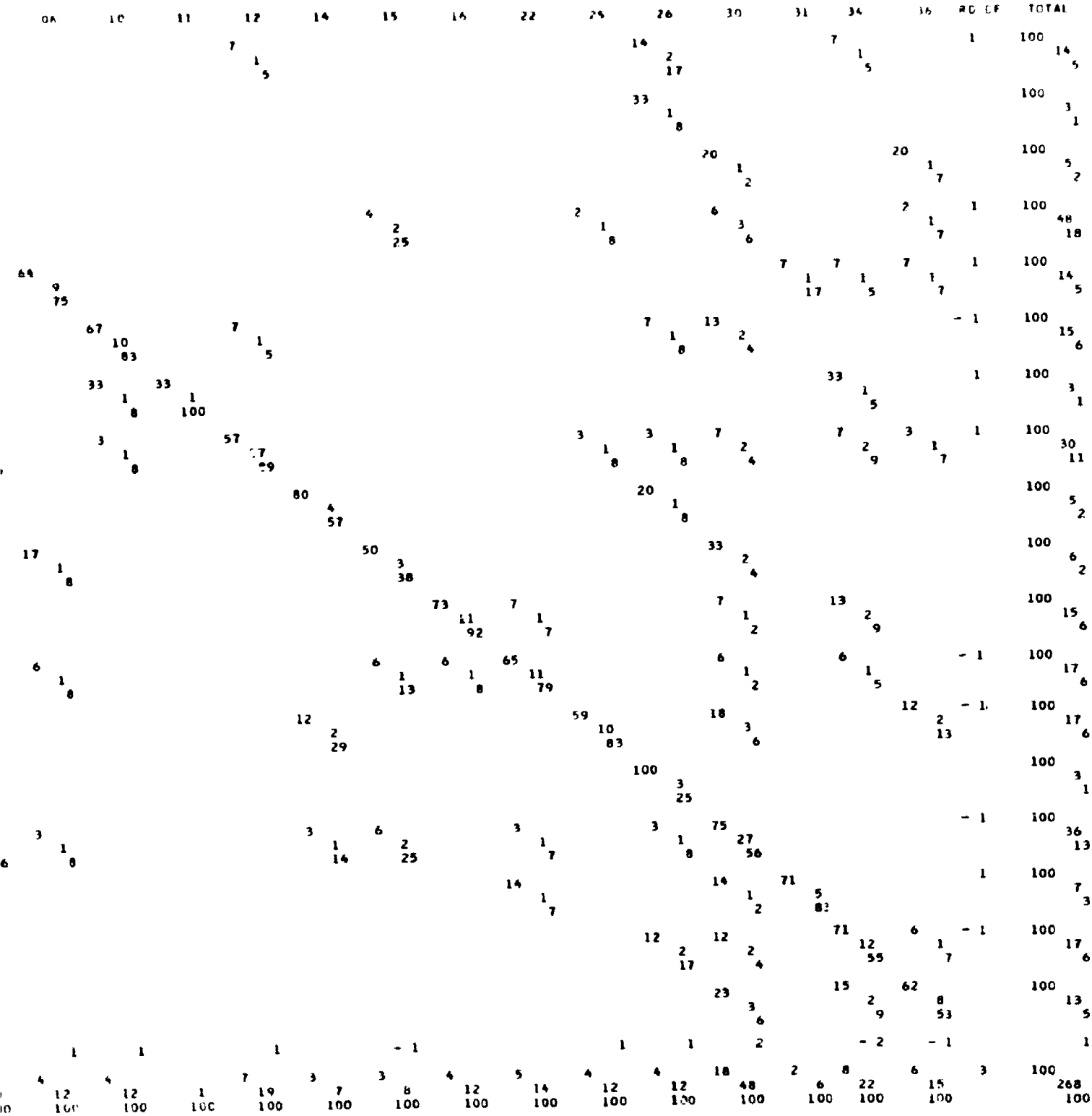

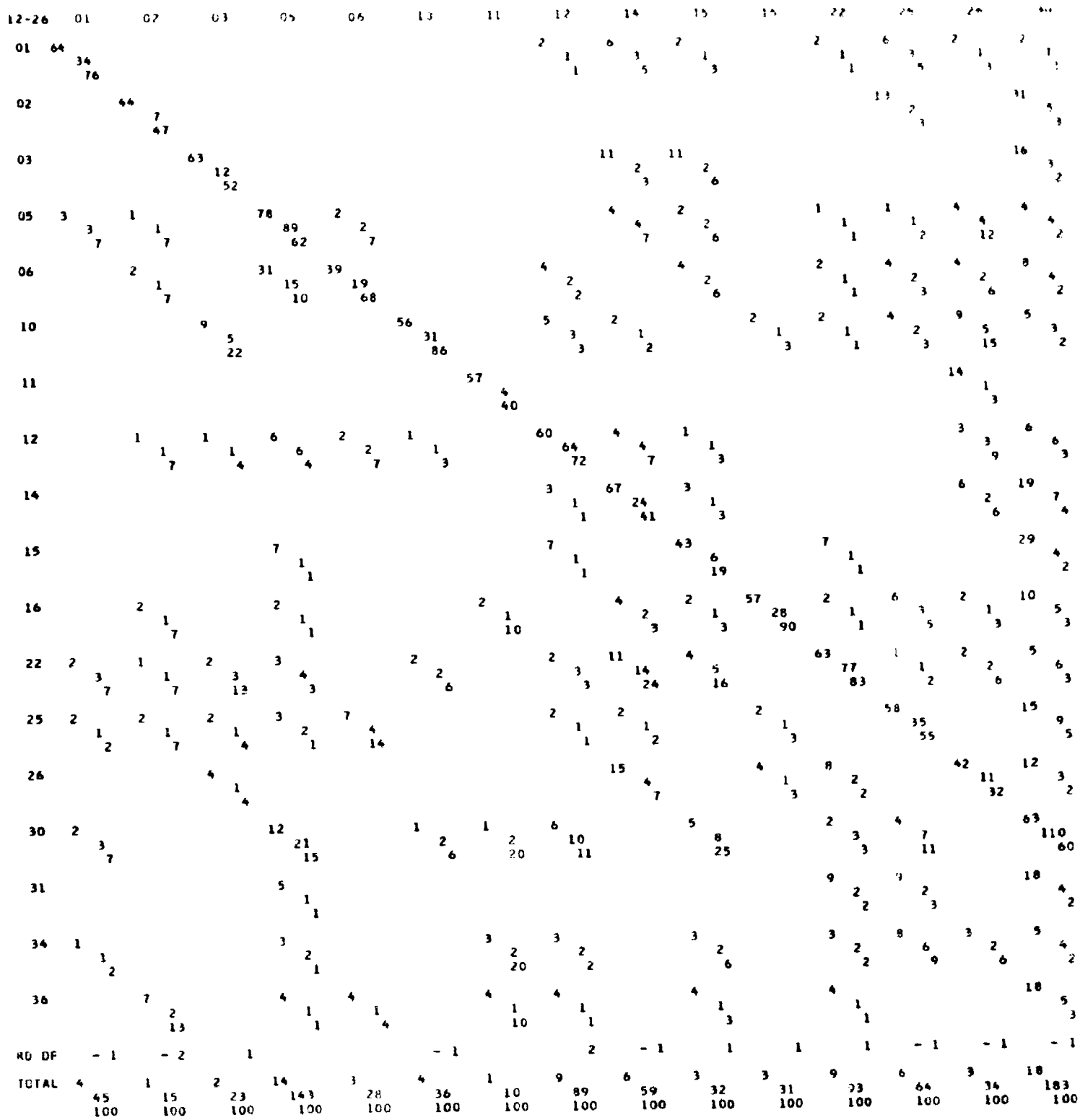

vs. FIELD OF CHUNK

06	10	11	12	14	15	16	22	25	26	30	31	34	36	RD DF	TOTAL
			2 1 1	6 3 5	2 1 3		2 1 1	6 3 5	2 1 3	2 1 1		4 2 3	11 6 12	- 1	100 53 5
								13 2 3		31 5 3		13 2 3		- 1	100 16 2
				11 2 3	11 2 6					16 3 2				- 1	100 19 2
2 2 7				4 4 7	2 2 6		1 1 1	1 1 2	4 4 12	4 4 2		1 1 1	2 2 4	- 3	100 114 11
39 19 68			4 2 2		4 2 6		2 1 1	4 2 3	4 2 6	8 4 2			2 1 2		100 49 5
	56 31 86		5 3 3	2 1 2		2 1 3	2 1 1	4 2 3	9 5 15	5 3 2		4 2 3	2 1 2		100 55 5
		57 4 40							14 1 3			29 2 3			100 7 1
2 2 7	1 1 3		60 64 72	4 4 7	1 1 3				3 3 9	6 6 3	3 3 18	7 7 9	7 8 16	- 2	100 107 10
			3 1 1	67 24 41	3 1 3				6 2 6	19 7 4		3 1 1		- 1	100 36 4
			7 1 1		43 6 19		7 1 1			29 4 2			7 1 2		100 14 1
		2 1 10		4 2 3	2 1 3	57 28 90	2 1 1	6 3 5	2 1 3	10 5 3		2 1 1	8 4 8	1	100 49 5
	2 2 6		2 3 3	11 14 24	4 5 16		63 77 83	1 1 2	2 2 6	5 6 3		1 1 1		1	100 122 12
7 4 14			2 1 1	2 1 2		2 1 3		58 35 55		15 9 5	2 1 6	2 1 1	3 2 4	- 2	100 60 6
				15 4 7		4 1 3	8 2 2		42 11 32	12 3 2		15 4 5			100 26 3
	1 2 6	1 2 20	6 10 11		5 8 25		2 3 3	4 7 11		63 110 60	1 1 6	1 1 1	3 6 12	- 1	100 174 17
							9 2 2	9 2 3		18 4 2	50 11 65		9 2 4		100 22 2
		3 2 20	3 2 2		3 2 6		3 2 2	8 6 9	3 2 6	5 4 2		64 49 64	5 4 8	- 1	100 76 7
4 1 4		4 1 10	4 1 1		4 1 3		4 1 1			18 5 3	4 1 6	7 2 3	43 12 24	- 3	100 28 3
	- 1		2	- 1	1	1	1	- 1	- 1	- 1	- 1	1	2		- 1
3 28 100	4 36 100	1 10 100	9 89 100	6 59 100	3 32 100	3 31 100	9 93 100	6 64 100	3 34 100	18 183 100	2 17 100	7 76 100	5 49 100		100 1027 100

12-26	01	02	03	05	06	10	11	12	14	15	16	22	25	26	30
01	50 1 20								50 1 6						
02		50 3 43								17 1 4			17 1 3		
03			78 18 82	4 1 3							9 2 7		4 1 3		
05				79 27 82				3 1 10	3 1 6	9 3 13		3 1 9	3 1 3		
06		22 2 29			56 5 71				11 1 6				11 1 3		
10						80 4 80						20 1 9			
12	6 1 20			6 1 3				50 8 80	6 1 6	6 1 4		6 1 9	6 1 3		6 1 6
14									80 8 44	10 1 4					10 1 6
15										100 8 35					
16	4 1 20									4 1 4	88 22 81				
22								10 1 10				70 7 64			10 1 6
25			3 1 5	3 1 3					7 2 11		3 1 4		70 21 70		7 2 13
26			11 1 5								22 2 7			67 6 100	
30	8 2 40		4 1 5	8 2 6	8 2 29	4 1 20	4 1 100		12 3 17	12 3 13					36 9 56
31										20 1 4					20 1 6
34		12 2 29	6 1 5	6 1 3					6 1 6	6 1 4			12 2 7		6 1 6
36										33 3 13		11 1 9	22 2 7		
NO DF		- 1	- 2						- 2	2	1		1		1
TOTAL	2 5 100	3 7 100	9 22 100	14 33 100	3 7 100	2 5 100	1 100	4 10 100	7 18 100	9 23 100	11 27 100	5 11 100	12 30 100	2 6 100	7 16 100

VS. FIELD OF CHOICE

06	10	11	12	14	15	16	22	25	26	30	31	34	36	NO DF	TOTAL
				50											100
				1											2
				6											1
												17		- 1	100
				17				17				1			6
				1				1				8			2
				4				4				4		1	100
						9						1			23
3						2		1				8			9
			3	3	9		3	3							100
			1	1			1	1							34
			10	6	13		9	3							14
56				11				11							100
5				1				1							9
71				6				3							4
	80						20								100
	4						1								5
	80						9								2
			50	6	6		6	6		6			6	2	100
			8	1	1		1	1		1			1		16
3			80	6	4		9	3		6			20		7
				80	10					10					100
				8	1					1					10
				44	4					6					4
				100											100
					8										8
					35										3
				4		88							4		100
				1		22							1		25
				4		81							20		10
			10				70			10		10			100
			1				7			1		1			10
			10				64			6		8			4
				7		3		70		7		7			100
3				2		1		21		2		2			30
				11		4		70		13		15			12
						22			67						100
						2			6						9
						7			100						4
8	4	4		12	12					36	4				100
2	1	1		3	3					9	1				25
6 29	20	100		17	13					56	25				10
					20					20	60				100
					1					1	3				5
					4					6	75				2
				6	6			12		6		47		- 1	100
3				1	1			2		1		8			17
				6	4			7		6		62			7
					33		11	22					33	1	100
					3		1	2					3		9
					13		9	7					60		4
				- 2	2	1		1		1		- 1			1
3	2		4	7	9	11	5	12	2	7	2	5	2	1	100
7	5	1	10	18	23	27	11	30	6	16	4	13	5		243
100	100	100	100	100	100	100	100	100	100	100	100	100	100		100

12-26	01	02	03	05	06	10	11	12	14	15	16	22	25	26	30	
01	70 32 74		2 1 5	2 1 1	7 3 30				4 2 6				2 1 4		9 4 4	
02		56 9 90	6 1 5	6 1 1						13 2 10			6 1 4		6 1 1	
03			53 10 53	5 1 1					11 2 6		11 2 10				11 2 2	
05	1 1 2			77 79 69	4 4 14				1 1 3	1 1 5				3 3 16	14 14 14	
06				12 3 3	73 19 68					4 1 5		4 1 3			4 1 1	
10						71 5 50									29 2 2	
11							100 1 25									
12	3 1 2			3 1 1	5 2 7			60 24 77	3 1 3	3 1 5		5 2 5		3 1 5	8 3 3	3
14	4 1 2								77 20 56				4 1 4		15 4 4	
15					8 1 10			15 2 6		62 8 38					15 2 2	
16	3 1 2		10 3 16								55 17 81		3 1 4	6 2 11	16 5 5	
22	4 2 5		2 1 5	2 1 1	2 1 10				5 3 8	4 2 10		57 32 80	4 2 8	7 4 21	11 6 6	2
25			5 2 11	8 3 3				8 3 10	5 2 6	3 1 5			46 17 68		11 4 4	5
26					7 1 4						14 2 10			29 4 21	29 4 4	
30		1 1 10	1 1 5	22 21 18	1 1 4		3 3 75	2 2 6	3 3 8	4 4 19		3 3 9		2 2 11	48 45 45	3
31				11 2 2								11 2 5				61
34	6 3 7			2 1 1	2 1 4				4 2 6	2 1 5			4 2 8	6 3 16	2 1 1	
36	14 2 5														14 2 2	
RD DF	1			- 1	- 1			1	- 2	- 2	- 1	- 1		- 1		
TOTAL	7 43 100	2 10 100	3 19 100	19 114 100	5 28 100	2 10 100	1 4 100	5 31 100	6 36 100	3 21 100	3 21 100	7 40 100	4 25 100	3 19 100	16 100 100	3

	06	10	11	12	14	15	16	22	25	26	30	31	34	36	RD OF	TOTAL
		7 3 30			4 2 6				2 1 4		9 4 4		4 2 4			100 46 8
1																
					13 2 10				6 1 4		6 1 1		6 1 2	1		100 16 3
1																
					12 2 6		11 2 10				11 2 2			11 2 9	- 2	100 19 3
1																
	4 4 14				1 1 3	1 1 5				3 3 16	14 14 14				- 1	100 103 17
9																
	73 19 68					4 1 5		4 1 3			4 1 1		4 1 2		- 1	100 26 4
3																
		71 5 50									29 2 2					100 7 1
			100 1 25													100 1
	5 2 7			60 24 77	3 1 3	3 1 5		5 2 5		3 1 5	8 3 3	3 1 6	3 1 2	5 2 9	- 4	100 40 7
1																
					77 20 56				4 1 4		15 4 4					100 26 4
		8 1 10		15 2 6		62 8 38					15 2 2					100 13 2
							55 17 81		3 1 4	6 2 11	16 5 5		6 2 4	1		100 31 5
		2 1 10			5 3 8	4 2 10		57 32 80	4 2 8	7 4 21	11 6 6	2 1 6	2 1 2		- 2	100 56 9
1																
				8 3 10	5 2 6	3 1 5			46 17 68		11 4 4	5 2 11		8 3 14	1	100 37 6
3																
	7 1 4						14 2 10			29 4 21	29 4 4		21 3 6			100 14 2
	1 1 4		3 3 75	2 2 6	3 3 8	4 4 19		3 3 8		2 2 12	48 45 45	3 3 17	3 3 6	2 2 9	2	100 94 15
8																
							11 2 5					61 11 61	17 3 6			100 18 3
2																
	2 1 4				4 2 6	2 1 5			4 2 8	6 3 16	2 1 1		64 30 64	6 3 14	2	100 47 8
1																
											14 2 2			71 10 45	1	100 14 2
1	- 1			1	- 2	- 2	- 1	- 1		- 1		- 1	2			1
	5 28 100	2 10 100	1 4 100	5 31 100	6 36 100	3 21 100	3 21 100	7 40 100	4 25 100	3 19 100	16 100 100	3 18 100	8 47 100	4 22 100	- 1	100 608 100
0																

12-26	01	02	03	05	06	10	11	12	14	15	16	22	25	26	30
01	59 22 81			5 2 2	3 1 4				3 1 1	5 2 4	3 1 3	5 2 2		11 4 3	
02		53 10 59	5 1 3							11 2 4			16 3 3		10 3 2
03			71 10 30								7 1 2		14 2 2		7 1 1
05		1 1 6	1 1 3	76 97 78	1 1 4			2 2 5	2 3 4	2 3 6	1 1 2	1 1 3	4 5 5	2 3 13	4 5 4
06	2 1 4	5 2 12		12 5 4	51 22 85			5 2 5	9 4 6	2 1 2				2 1 4	7 3 2
10			13 4 12			81 26 90									
11							100 4 100								
12	4 2 7		2 1 3	2 1 1	2 1 3			64 32 84	6 3 4	8 4 9			10 5 5	2 1 1	
14			5 2 6					84 37 53		2 1 2				5 2 8	5 2 2
15										58 7 15	17 2 6			17 2 2	
16			7 4 12	2 1 1							80 49 89	2 1 3	2 1 1	8 5 4	
22				6 3 2				2 1 3	12 6 9	8 4 9	48 25 76	10 5 5	2 1 4	10 5 4	
25		1 1 6	4 3 9	3 2 2					7 5 7	7 5 11		61 46 49		13 10 8	1
26									13 2 3	6 1 2			81 13 54		
30	1 1 4	1 1 6	2 3 9	9 13 10	1 2 8				5 7 10	6 8 17	1 1 3	10 14 15	1 1 4	61 85 65	1
31										13 1 2		13 1 1	13 1 4		63
34		2 1 6	2 1 3			4 2 7			2 1 1	9 5 11	4 2 6	15 8 9	4 2 8	6 3 2	
36	3 1 4	3 1 6	9 3 9	3 1 1				3 1 3	3 1 1	12 4 9	9 1 5	6 2 2		6 2 2	
RD OF		- 1	1	- 1	- 1				1	- 1		1	1	- 2	
TOTAL	3 27 100	2 17 100	4 33 100	15 125 100	3 26 100	4 29 100	4 100	5 38 100	9 70 100	6 47 100	7 55 100	4 33 100	11 94 100	3 24 100	16 131 100	1

FIELD OF CHUNK

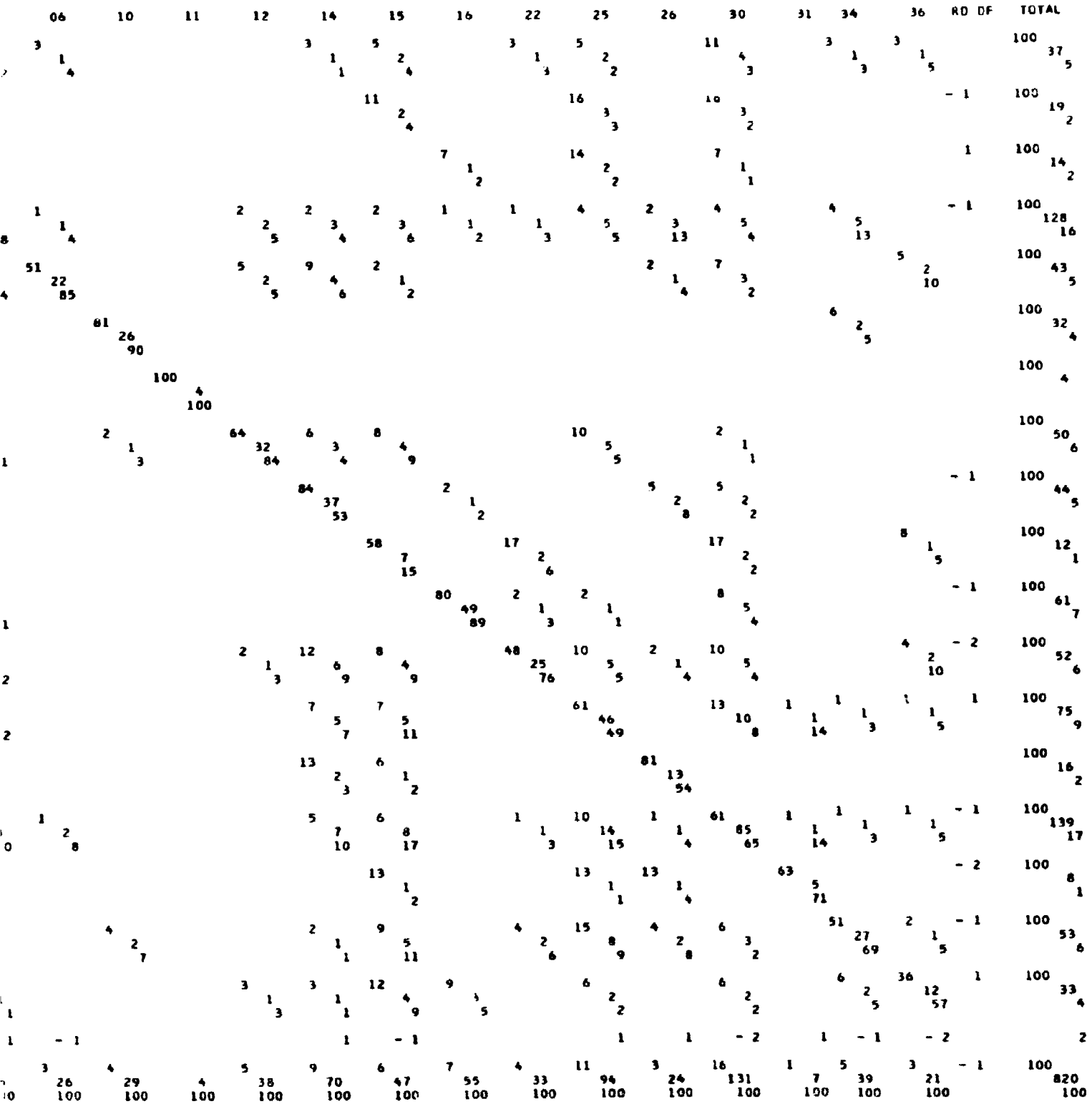

42K Manufacturer, Data Center FIELD OF TASK vs. FIELD OF CHUNK

12-26	01	02	03	05	06	10	12	14	15	16	22	25	26	30	31
01	65 22 92			3 1 2			6 2 11	6 2 9	3 1 25		6 2 15		3 1 6	3 1 3	
02		67 2 67		33 1 2											
03			75 3 75				25 1 5								
05				81 35 67			2 1 5	2 1 25				2 1 17	2 1 6	7 3 8	
06				50 5 10	40 4 100		10 1 6								
10			14 1 25			29 2 67	14 1 6				29 2 15		14 1 6		
12				6 1 2			65 11 61	6 1 5			6 1 8			6 1 3	6 1 20
14								91 10 45					9 1 6		
16								50 3 14		50 3 100					
22	10 2 8			14 3 6				14 3 14			33 7 54	5 1 17	19 4 25		
25				11 1 2								33 3 50	11 1 6	44 4 11	
26													100 6 38		
30				8 3 6			5 2 11		5 2 50		3 1 8	3 1 17		68 27 75	8 3 60
31				67 2 4											33 1 20
34		6 1 33				6 1 33							6 1 6		
36							25 1 6	25 1 5							
RO OF				- 1			- 1	- 2				- 1	1		
TOTAL	10 24 100	1 3 100	2 4 100	22 52 100	2 4 100	1 3 100	8 18 100	9 22 100	2 4 100	1 3 100	6 13 100	3 6 100	7 16 100	15 36 100	2 5 100

FIELD OF TASK vs. FIELD OF CHUNK

05	06	10	12	14	15	16	22	25	26	30	31	34	36	RD CF	TOTAL
3 1 2			6 2 11	6 2 9	3 1 25		6 2 15		3 1 6	3 1 3		6 2 11		- 1	100 34 15
33 1 2															100 3 1
				25 1 5											100 4 2
81 35 67				2 1 5	2 1 25			2 1 17	2 1 6	7 3 8		2 1 6		2	100 43 18
50 5 10	40 4 100		10 1 6												100 10 4
		29 2 67	14 1 6				29 2 15		14 1 6						100 7 3
6 1 2			65 11 61	6 1 5			6 1 8			6 1 3	6 1 20	6 1 6		- 1	100 17 7
				91 10 45					9 1 6						100 11 5
				50 3 14		50 3 100									100 6 3
14 3 6				14 3 14			33 7 54	5 1 17	19 4 25			5 1 6			100 21 9
11 1 2								33 3 50	11 1 6	44 4 11				1	100 9 4
									100 6 38						100 6 3
8 3 6			5 2 11		5 2 50		3 1 8	3 1 17		68 27 75	8 3 60	3 1 6		- 3	100 40 17
67 2 4											33 1 20				100 3 1
		6 1 33							6 1 6			75 12 67	6 1 33	1	100 16 7
			25 1 6	25 1 5									50 2 67		100 4 2
- 1			- 1	- 2				- 1	1			- 2			- 1
22 52 100	2 4 100	1 3 100	8 18 100	9 22 100	2 4 100	1 3 100	6 13 100	3 6 100	7 16 100	15 36 100	2 5 100	8 18 100	1 3 100		100 234 100

This series of seven tables shows which first sources of information were used in relation to the class and field of the information. The analysis of these tables shows that there are no significant or outstanding relationships between the class and field of the information and the first person or organization contacted to obtain the information.

42A Received with Task CLASS OF CHUNK vs. FIELD OF CHUNK

25-26	01	02	03	05	06	10	11	12	14	15	16	22	25	26	30
A	4 1 5		16 4 5	4 1 5				4 1 3	8 2 12	12 3 20	4 1 6	4 1 2	16 4 12		16 4 5
B	13 1 3		13 1 1	13 1 5							13 1 6	13 1 2	25 2 15		1
C	8 6 18	3 2 9	20 15 17	1 1 5	1 1 7			8 6 19	3 2 12	1 1 7	3 2 12	7 5 12	7 5 15	4 3 23	18 14 17
E		11 2 9	6 1 1					6 1 3	6 1 6	28 5 33			11 2 6		22 4 5
F	8 22 67	1 2 50	5 13 59	21 56 65	4 10 48	3 8 57	1 1 100	6 17 55	3 7 41	1 2 13	2 5 29	11 29 67	5 14 42	2 5 38	19 42 51
H	5 3 6	5 2 50	5 2 9	5 2 2	5 2 10	9 4 29		5 2 6	12 5 29	7 3 20	5 2 12	14 6 14	12 5 15		12 5 6
J	3 1 3	6 2 9	13 4 5	16 5 24	3 1 7			3 1 3	3 1 7	3 1 7	3 1 6	3 1 2	9 3 9	9 3 23	19 6 7
N	5 1 3		14 3 3	5 1 5			14	3 10		24 5 29					33 7 9
RD DF			1	- 2				1				1	1	1	
TOTAL	7 33 100	1 4 100	4 22 100	17 86 100	4 21 100	3 14 100	1 1 100	6 31 100	3 17 100	3 15 100	3 17 100	9 43 100	7 33 100	3 13 100	17 82 100

42B Supervisor: CLASS OF CHUNK vs. FIELD OF CHUNK

25-26	01	02	03	05	06	10	11	12	14	15	16	22	25	26	30
A				22 4 8	6 1 8			11 2 11			11 2 17		22 4 33		6 1 2
B	9 1 8			9 1 2				18 2 11						27 3 25	36 4 8
C	7 4 31	2 1 33	23 14 29	2 1 8	7 4 33				5 3 43		2 1 8	7 4 29	2 1 8	5 3 25	30 18 38
E										100 7 88					
F	5 6 46	1 1 33	17 20 41	7 8 67	5 6 50			10 11 58	3 3 43		3 4 33	8 9 64	3 3 25	3 4 33	14 16 33
H	17 2 67		8 1 2	8 1 8				17 2 11	8 1 14		8 1 8	8 1 7			
J	4 1 8	4 1 33	4 1 33	35 9 18	4 1 8	8 2 17		4 1 5	4 1 13	8 2 17		8 2 17		12 3 6	
N	5 1 8						5 1 100	5 1 5			11 2 17		11 2 17	11 2 17	32 6 13
RD DF	- 1	1		1				- 1		- 1					
TOTAL	5 13 100	1 3 100	1 3 100	18 49 100	4 12 100	4 12 100	1 1 100	7 19 100	3 7 100	3 8 100	4 12 100	5 14 100	4 12 100	4 12 100	18 48 100

CHUNK vs. FIELD OF CHUNK

rces of information were used in relation to the class
e tables shows that there are no significant or out
of the information and the first person or organization

vs. FIELD OF CHUNK

06	10	11	12	14	15	16	22	25	26	30	31	34	36	RD OF	TOTAL
4 1 5			4 1 3	8 2 12	12 3 20	4 1 6	4 1 2	16 4 12		16 4 5	6 1 6		8 2 12		100 25 5
13 1 5						13 1 6	13 1 2	25 2 15		13 1 6				- 3	100 8 2
1 1 5	1 1 7		8 6 19	3 2 12	1 1 7	9 2 12	7 5 12	7 5 15	4 3 23	18 14 17	3 2 12	11 8 27	4 3 18	- 2	100 76 15
			6 1 3	6 1 6	28 5 33			11 2 6		22 4 5	6 1 6	6 1 3		- 2	100 18 4
4 10 48	3 8 57	1 100	6 17 55	3 7 41	1 2 13	2 5 29	11 29 67	5 14 42	2 5 38	15 42 51	4 11 65	7 19 63	4 10 59	- 2	100 273 55
5 2 10	9 4 29		5 2 6	12 5 29	7 3 20	5 2 12	14 6 14	12 5 15		12 5 6		2 1 3		- 3	100 43 9
16 5 24	3 1 7		3 1 3		3 1 7	3 1 5	3 1 2	9 3 9	9 3 23	19 6 7	3 1 6	3 1 3	3 1 6	1	100 32 6
5 1 5		14 3 10			24 5 29					33 7 9			5 1 6		100 21 4
- 2			1			1	1	1			- 1	1	- 1		
4 21 100	3 14 100	1 100	6 31 100	3 17 100	3 15 100	3 17 100	9 43 100	7 33 100	3 13 100	17 82 100	3 17 100	6 30 100	3 17 100	1	100 496 100

LD OF CHUNK

06	10	11	12	14	15	16	22	25	26	30	31	34	36	RD OF	TOTAL
6 1 8			11 2 11			11 2 17		22 4 33		6 1 2	6 1 17	11 2 9	6 1 7	- 1	100 18 7
			18 2 11						27 3 25	36 4 8				1	100 11 4
2 1 8	7 4 33			5 3 43		2 1 8	7 4 29	2 1 8	5 3 25	30 18 38	3 2 33	3 2 9	3 2 13	- 1	100 60 22
					100 7 88										100 7 3
7 8 67	5 6 50		10 11 58	3 3 43		3 4 33	8 9 64	3 3 25	3 4 33	14 16 33	2 2 33	12 14 64	7 8 53		100 115 43
8 1 8			17 2 11	8 1 14		8 1 8	8 1 7				8 1 17	8 1 5	8 1 7	2	100 12 4
4 1 8	8 2 17		4 1 5		4 1 13	8 2 17		8 2 17		12 3 6		4 1 5	4 1 7	- 3	100 26 10
		5 1 100	5 1 5			11 2 17		11 2 17	11 2 17	32 6 13		11 2 9	11 2 13	- 2	100 19 7
1			- 1		- 1							- 1			
4 12 100	4 12 100	1 100	7 19 100	3 7 100	3 8 100	4 12 100	5 14 100	4 12 100	4 12 100	18 48 100	2 6 100	8 22 100	6 15 100	3	100 268 100

42E Colleague, Consultant CLASS OF CHUNK vs. FIELD OF CHUNK

25-26	01	02	03	05	06	10	11	12	14	15	16	22	25	26	30
A	3 2 4	2 1 7	2 1 4	19 11 8		2 1 3	2 1 10	8 5 6	5 3 5	8 5 16	3 2 6	3 2 2	22 13 20		8 5 3
B	2 1 2			9 4 3	5 2 7	5 2 6	5 2 20	7 3 3	9 4 7			5 2 2		7 3 9	30 13 7
C	2 5 11	1 3 20	4 10 43	18 41 29	2 5 18	4 9 25	1 2 20	3 7 8	4 10 17	3 6 19	5 11 35	11 24 26	5 12 19	3 7 21	21 48 26
E	3 1 2			5 2 1	3 1 4			5 2 2		45 18 56	3 1 3	8 3 3	20 8 13	3 1 3	3 1 1
F	6 25 56	2 7 47	2 7 30	13 59 41	3 13 46	4 17 47	1 4 40	12 52 58	7 32 54		2 9 29	3 45 48	3 15 23	2 8 24	17 73 40
H	5 2 4	5 2 13	2 1 4	5 2 1	2 1 4	2 1 3		9 4 4	5 2 3	5 2 6	5 2 6	12 5 5	12 5 8		16 7 4
J	6 7 16	1 1 7	3 3 13	17 19 13	4 4 14	5 5 14	1 1 10	10 11 12	5 6 10	1 1 3	4 4 13	5 6 6	7 8 13	5 5 15	19 21 11
M	3 2 4	1 1 7	1 1 4	7 5 3	3 2 7	1 1 3		7 5 6	3 2 3		3 2 6	9 6 6	4 3 5	15 10 29	22 15 8
RD DF	1	- 1	2	1		- 1		1	1		2	2	- 1	- 1	
TOTAL	4 45 100	1 15 100	2 23 100	14 143 100	3 28 100	4 36 100	1 10 100	9 89 100	6 59 100	3 32 100	3 31 100	9 93 100	6 64 100	3 34 100	18 183 100

42F Library -- Librarian: CLASS OF CHUNK vs. FIELD OF CHUNK

25-26	01	02	03	05	06	10	11	12	14	15	16	22	25	26	30
A		3 1 14	14 5 23	16 6 18					3 1 6	19 7 30	3 1 4		30 11 37	5 2 33	8 3 19
C	8 3 60		6 2 9	17 6 18				6 2 20	11 4 22	3 1 4	8 3 11	8 3 27	6 2 7		14 5 31
E			15 3 14	5 1 3						65 13 57	5 1 4		10 2 7		
F	1 1 20	5 4 57	11 8 36	15 11 33	3 2 29	4 3 60		9 7 70	11 8 44		9 7 26	8 6 55	8 6 20	1 1 17	5 4 25
H		13 1 14		13 1 3					13 1 6	13 1 4	13 1 4	13 1 9	13 1 3		13 1 6
J	2 1 20		5 3 14	14 8 24	9 5 71	4 2 40	2 1 100		4 2 11	2 1 4	18 10 37	2 1 9	14 8 27	5 3 50	5 3 19
M		9 1 14	9 1 5					9 1 10	18 2 11		36 4 15				
RD DF		1	- 1	1						1	- 1		- 1		
TOTAL	2 5 100	3 7 100	9 22 100	14 33 100	3 7 100	2 5 100	1 100	4 10 100	7 18 100	9 23 100	11 27 100	5 11 100	12 30 100	2 6 100	7 16 100

s. FIELD OF CHUNK

06	10	11	12	14	15	16	22	25	26	30	31	34	36	RD DF	TOTAL
	2	2	8	5	8	3	3	22		8		10	2	1	100
	1	1	5	3	5	2	2	13		5		6	1		59
	3	10	6	5	16	6	2	20		3		8	2		6
	5	5	7	9			5		7	30	2	7	9	- 2	100
2	2	2	3	4			2		3	13	1	3	4		44
7	6	20	3	7			2		9	7	6	4	8		4
	4	1	3	4	3	5	11	5	3	21	1	5	4	3	100
5	9	2	7	10	6	11	24	12	7	48	3	12	9		224
18	25	20	8	17	19	35	26	19	21	26	18	16	18		22
		5		45	3	8	20	3	3		5			- 3	100
1		2			18	1	3	8	1	1		2			40
4	4	2			56	3	3	13	3	1		3			4
	4	1	12	7		2	10	3	2	17	2	9	5		100
13	17	4	52	32		9	45	15	8	73	10	39	23		438
46	47	40	58	54		29	48	23	24	40	59	51	47		43
	2		9	5	5	5	12	12		16		12	5	- 2	100
1	1		4	2	2	2	5	5		7		5	2		43
4	3		4	3	6	6	5	8		4		7	4		4
	5	1	10	5	1	4	5	7	5	19	3	3	3	- 2	100
4	5	1	11	6	1	4	6	8	5	21	3	3	3		111
14	14	10	12	10	3	13	6	13	15	11	18	4	6		11
	1		7	3		3	9	4	15	22		9	10	2	100
2	1		5	2		2	6	6	10	15		6	7		68
7	3		6	3		6	6	5	29	8		8	14		7
	- 1		1	1		2	2	- 1	- 1		- 1	- 1	1		- 1
	4	1	9	6	3	3	9	6	3	18	2	7	5		100
28	36	10	89	59	32	31	93	64	34	183	17	76	49		1027
100	100	100	100	100	100	100	100	100	100	100	100	100	100		100

vs. FIELD OF CHUNK

06	10	11	12	14	15	16	22	25	26	30	31	34	36	RD DF	TOTAL
				3	19	3		30	5	8				- 1	100
				1	7	1		11	2	3					37
				6	30	4		37	33	19					15
			6	11	3	8	8	6		14		11	3	- 1	100
			?	4	1	3	3	2		5		4	1		36
			20	22	4	11	27	7		31		31	20		15
					65	5		10							100
					13	1		2							20
					57	4		7							8
3	4		9	11		9	8	8	1	5	4	5		1	100
2	3		7	8		7	6	6	1	4	3	4			75
29	60		70	44		26	55	20	17	25	75	31			31
				13	13	13	13	13		13				- 4	100
				1	1	1	1	1		1					8
				6	4	4	9	3		6					3
	4	2		4	2	18	2	14	5	5	2	9	4	- 1	100
5	2	1		2	1	10	1	8	3	3	1	5	2		56
71	40	100		11	4	37	9	27	50	19	25	38	40		23
			9	18		36							18	1	100
			1	2		4							2		11
			10	11		15							40		5
					1	- 1		- 1							
1	2		4	7	9	12	5	12	2	7	2	5	2	1	100
7	5	1	10	18	23	27	11	30	6	16	4	13	5		243

42H Department Files CLASS OF CHUNK vs. FIELD OF CHUNK

25-26	01	02	03	05	06	10	11	12	14	15	16	22	25	26	30	
A	5 1 10	5 1 5	20 4 4	5 1 4				5 1 3	5 1 5	5 1 5	10 2 5	15 3 12		15 3 3	1
B	9 2 5	5 1 5	23 5 4	5 1 4	5 1 10								5 1 5	27 6 6	
C	6 7 16	1 1 5	17 19 17	2 2 7	4 4 40		5 5 16	4 4 11		3 3 14	4 4 10	7 8 32	5 5 26	30 33 33	
E		3 1 5	6 2 2	6 2 7	3 1 10		3 1 3	3 1 3	47 17 81	3 1 5	11 4 10	8 3 12		8 3 3	
F	8 24 56	2 5 50	3 8 42	21 60 53	6 18 64	1 2 20	1 1 25	6 16 52	8 23 64	1 1 5	3 9 43	7 20 50	1 2 8	3 8 42	14 40 40	
H		4 1 10	7 2 11	14 4 4	4 1 4		11 3 10	4 1 3	7 2 10		7 2 5	7 2 8	4 1 5	25 7 7		
J	10 6 14	5 3 30	6 4 21	21 13 11	3 2 7	3 2 20	3 2 50	5 3 10	5 3 8	10 6 29	8 5 13	8 5 20	3 2 11	5 3 3	
M	9 4 9		2 1 5	16 7 6	2 1 4	2 1 25	7 3 10	7 3 8		2 1 5	7 3 8	5 2 8	5 2 11	12 5 5		
RD OF			1	- 1	- 1			- 1		- 1	- 1	- 1				
TOTAL	7 43 100	2 10 100	3 19 100	19 114 100	5 28 100	2 10 100	1 4 100	5 31 100	6 36 100	3 21 100	3 21 100	7 40 100	4 25 100	3 19 100	16 100 100	

421 Own Collection: CLASS OF CHUNK vs. FIELD OF CHUNK

25-26	01	02	03	05	06	10	11	12	14	15	16	22	25	26	30	
A	1 1 4	8 6 35	3 2 6	12 9 7		1 1 3		5 4 11	1 1 1	7 5 11	1 1 2	3 2 6	43 32 34	3 2 5	7 5 4	
B				7 1 1					7 1 1					43 6 25	29 4 3	
C	3 4 15		4 6 18	17 26 21	3 5 19	2 3 10		2 3 8	5 8 11	3 4 9	8 13 24	5 7 21	5 7 7	5 8 33	32 49 37	1
E	2 2 7	2 2 12	1 1 3	8 7 6	1 1 4	2 2 7		2 2 5	4 4 6	39 36 77	2 2 4	2 2 6	24 22 23	2 2 8	2 2 2	1
F	5 15 56	1 4 24	6 16 55	18 58 46	4 13 50	6 19 62	1 4 100	5 17 45	14 46 66	1 1 2	7 24 44	5 15 45	5 15 16	2 5 21	13 43 33	1
H		4 2 12	4 2 6	15 7 6	6 3 12		13 6 16	11 5 7	2 1 2	6 3 5	9 4 12	15 7 7		11 5 4		2
J	5 4 15	4 3 18	4 3 9	18 14 11	4 3 12	5 4 14		5 4 11	5 4 6	10	4 3 15	11 9 9	1 1 4	16 13 10		1
M	3 1 4		3 1 3	9 3 2	3 1 4	3 1 3		6 2 5	3 1 1	12 4 7		8 2 2		36 10 8		3
RD OF	- 1	- 1			- 1	1		- 1	1	- 1	- 1	1	1	1	- 1	
TOTAL	3 27 100	2 17 100	4 33 100	15 125 100	3 26 100	4 29 100	1 1 100	5 38 100	9 70 100	6 47 100	7 53 100	4 33 100	11 94 100	3 24 100	16 131 100	1

K vs. FIELD OF CHUNK

5	06	10	11	12	14	15	16	22	25	26	30	31	34	36	RD OF	TOTAL
5 4	1 4				5 1 3	5 1 5	5 1 5	10 7 5	15 3 12		15 3 3	10 2 11				100 20 3
5 4	5 1 4	1 10								5 1 5	27 6 6	5 1 6	18 9 9		- 2	100 22 4
2 -	2 7	4 40		5 5 16	4 4 11		3 3 14	4 4 10	7 8 32	5 5 26	30 33 33	3 3 17	5 6 13	5 6 27	- 1	100 110 18
2 2	6 2 7	3 1 10		3 1 3	3 1 3	47 17 81	3 1 5	11 4 10	8 3 12		8 3 3				- 1	100 36 6
0 53	6 18 64	1 2 20	1 25	6 16 52	8 23 64	1 5	3 9 43	7 20 50	1 2 8	3 8 42	14 40 40	3 10 56	10 28 60	4 11 50		100 286 47
4 4	4 1 4			11 3 10	4 1 3	7 2 10		7 2 5	7 2 8	4 1 5	25 7 7	4 1 6		4 1 5	- 2	100 28 5
3 11	3 2 7	3 2 20	3 2 50	5 3 10	5 3 8		10 6 29	8 5 13	8 5 20	3 2 11	5 3 3		6 4 9		- 1	100 63 10
7 6	2 1 4		2 1 25	7 3 10	7 3 8		2 1 5	7 3 8	5 2 8	5 2 11	12 5 5	2 1 6	12 5 11	9 4 18	1	100 43 7
1	- 1			- 1		- 1	- 1	- 1				- 2	- 2			
4 00	5 28 100	2 10 100	1 4 100	5 31 100	6 36 100	3 21 100	3 21 100	7 40 100	4 25 100	3 19 100	16 100 100	3 18 100	8 47 100	4 22 100	- 1	100 608 100

vs. FIELD OF CHUNK

5	06	10	11	12	14	15	16	22	25	26	30	31	34	36	RD OF	TOTAL
9 7		1 1 3		5 4 11	1 1 1	7 5 11	1 1 2	3 2 6	43 32 34	3 2 8	7 5 4	3 2 5		1 1 5	1	100 74 9
1 1				7 1 1						43 6 25	29 4 3	7 1 3		7 1 5		100 14 2
6 21	3 5 19	2 3 10	2 3 8	5 8 11	3 4 9	8 13 24	5 7 21	5 7 7	5 8 33	32 49 37	1 1 14	5 7 18	3 4 19	- 3		100 155 19
7 6	1 1 4	2 2 7	2 2 5	4 4 6	39 36 77	2 2 4	2 2 6	24 22 23	2 2 8	2 2 2	1 1 14	3 3 8	1 1 5	2		100 92 11
8 46	4 13 50	6 18 62	1 4 100	5 17 45	14 46 66	1 2	7 24 44	5 15 45	5 15 16	2 5 21	13 43 33	1 2 29	6 19 49	3 9 43	- 2	100 326 40
7 6	6 3 12		13	11 6 16	2 5 7	1 2	6 3 5	9 4 12	15 7 7		11 5 4	2 1 14		2 1 5		100 47 6
4 11	4 3 12	5 4 14		5 4 11	5 4 6		10 8 15	4 3 9	11 9 10	1 1 4	16 13 10	1 1 14	6 5 13		1	100 79 10
3 2	3 1 4	1 3		6 2 5	3 1 1		12 4 7	6 2 2			30 10 8	3 1 14	6 2 5	12 4 19	1	100 33 4
	- 1	1		- 1	1	- 1	- 1	1	1	1	- 1	1	- 1	- 1		- 1
5 -	3 24 100	4 20 100	1	5 38 100	9 70 100	6 47 100	7 55 100	4 34 100	11 94 100	3 24 100	16 131 100	1 7 100	5 39 100	3 21 100	- 1	100 820 100

42M Manufacturer, Data Center: CLASS OF CHUNK vs. FIELD OF CHUNK

25-26	01	02	03	05	06	10	12	14	15	16	22	25	26	30	31	34	36	RO DF	TOTAL
A							20 1 6		20 1 25	20 1 33			20 1 6			20 1 6			100 5 2
B	16 3 13		5 1 25	32 6 12	5 1 25		11 2 11	11 2 9			5 1 8		5 1 6	5 1 3		5 1 6			100 19 8
C	5 2 8			19 8 15	5 2 50	2 1 33	7 3 17	14 6 27	5 2 67		2 1 8	2 1 17	5 2 13	28 12 33	2 1 20	5 2 11		- 1	100 43 18
E									33 1 25			33 1 17		33 1 3				1	100 3 1
F	15 16 67	1 1 33	2 2 50	23 25 48	1 1 25	1 1 33	9 10 56	10 11 50	1 1 25		4 4 31	3 3 50	5 6 38	14 15 42	4 4 80	7 8 44	2 67	- 2	100 110 47
H		14 1 33	14 1 25	43 3 6			14 1 6						14 1 6					1	100 7 3
J	4 1 4			26 6 12				9 2 9			17 4 31	4 1 17	13 3 19	17 4 11		9 2 11		1	100 23 10
M	8 2 8	4 1 33		17 4 8		4 1 33	4 1 6	4 1 5	4 1 25		13 3 23		8 2 13	13 3 8		17 4 22	1 33		100 24 10
RO DF		1		- 1		1	- 2				- 1	- 1	- 1						1
TOTAL	10 24 100	1 3 100	2 4 100	22 52 100	2 4 100	1 3 100	8 18 100	9 22 100	2 4 100	1 3 100	6 13 100	3 6 100	7 16 100	15 36 100	2 5 100	8 10 100	1 3 100		100 234 100

3542 - 1 - ACTUAL LENGTH OF RETRIEVAL TIME vs. FIRST SOURCE

This table shows that, when information is obtained in less than one day, the department bookcase and personal files are commonly used as the first source. When information is obtained in less than one week, colleagues and manufacturers are commonly used as the first source. When information is obtained in one week or more, the library is used to some extent.

35-42	A	B	E	F	H	I	K	L	RD OF	TOTAL
A	13	5	21	4	15	25	5	12		100
	45	19	73	14	52	89	18	41		351
	9	7	7	6	9	11	8	4		7
B	6	5	26	4	22	30	3	3	1	100
	99	87	441	71	373	507	55	43		1676
	20	32	43	29	61	62	24	4		36
C	8	9	34	8	13	14	9	5		100
	62	65	250	56	96	100	68	38		735
	13	24	24	23	16	12	29	4		16
D	11	10	28	11	8	13	10	9		100
	100	88	249	95	74	119	90	80		895
	20	33	24	39	12	15	38	8		19
G	83	3	4	1	4			4	1	100
	189	6	9	3	9	1	1	10		228
	38	2	1	1	1			1		5
K			1					97	2	100
	1	3	5	4	4	4	2	779		802
		1		2	1		1	79		17
RD OF		1	1							
TOTAL	11	6	22	5	13	17	5	21		100
	496	268	1027	243	608	820	234	991		4687
	100	100	100	100	100	100	100	100		100

3648 See Table 4838(m)

3650 See Table 5038(m)

3694 See Table 9438(m)

3894 See Table 9438(m)

4245 - 1 - FIRST SOURCE vs. INFORMATION OBTAINED FROM FIRST SOURCE

This table shows that as a first source of information, colleagues and supervisors tend to supply proportionally more references to additional information.

42-45	A	B	C	D	BLNK	RD OF	TOTAL
A	55	39	4	1	1		100
	273	194	19	5	5		496
	15	11	6	6	1		11
B	37	46	16	1			100
	99	122	43	4			268
	5	7	14	5			6
E	42	39	17	2			100
	429	403	170	24	1		1027
	24	24	55	28			22
F	37	47	9	7			100
	89	115	21	18			243
	5	7	7	21			5
H	49	47	2	2			100
	296	286	14	10	2		608
	16	17	5	12			13
I	50	45	3	2			100
	408	371	24	16	1		820
	22	22	8	19			17
K	47	47	3	3			100
	111	109	7	7			234
	6	6	2	8			5
L	12	9	1		78		100
	116	88	9	2	776		991
	6	5	3	2	99		21
RD OF	1	1		- 1			
TOTAL	39	36	7	2	17	- 1	100
	1821	1688	307	86	785		4687
	100	100	100	100	100		100

4247 See T

4248 See T

4294 See T

URCE

he department bookcase and
s obtained in less than one
e. When information is obtained

K	L	RO OF	TOTAL
12			100
18	41		351
8	4		7
3		1	100
55	43		1676
24	4		36
5			100
68	38		735
29	4		16
9			100
90	80		895
38	8		19
4		1	100
1	10		228
	1		5
97		2	100
2	779		802
1	79		17
21			100
234	991		4687
100	100		100

rs. INFORMATION OBTAINED FROM

ource of information, colleagues and super-
y more references to additional information.

	D	BLNK	RO OF	TOTAL
1		1		100
	5	5		496
b	6	1		11
1				100
	4			260
b	5			6
2				100
	24	1		1027
b	28			22
7				100
	18			243
f	21			5
2				100
	10	2		408
b	12			13
2				100
	16	1		820
b	19			17
3				100
	7			234
e	8			5
	78			100
	2 776			991
b	2 99			21
	- 1			
2	17		- 1	100
	86 785			4687
b	100 100			100

4247 See Table 4742(u)

4348 See Table 4842(u)

4294 See Table 9442

3642(u) - 1 - DESIRED RETRIEVAL TIME vs. FIRST SOURCE

When the desired retrieval time for information is under one week, colleagues, one's
be heavily used as a first source of information. As the retrieval time increases, the
to locate the required information.

36-42	A	B	C	D	E	F	G	
A	12	2	2	1	21	1	8	16
	86	14	18	7	153	8	58	1
	17	17	10	13	16	22	28	
B	9	2	4	1	27	1	2	20
	53	11	23	6	165	4	12	1
	11	12	13	11	17	11	6	
C	6	2	4	1	30	1	5	19
	64	22	44	10	302	6	45	1
	13	24	25	18	31	16	22	
D	8	3	5	3	26	1	6	15
	66	26	39	23	217	11	50	1
	13	28	22	42	22	30	24	
E	8	3	12	1	25	2	8	10
	23	9	35	4	74	6	23	
	5	10	20	7	8	16	11	
F	15	2	6		25	1	8	8
	27	4	11		46	2	15	
	5	4	6		5	5	7	
G	83	2	1	1	4			5
	175	5	3	2	8			
	35	5	2	4	1			
BLNK					1			
	2		2	3	7		3	
			1	5	1		1	
RO OF	1		1		- 1		1	
TOTAL	11	2	4	1	21	1	4	13
	496	93	175	55	972	37	206	6
	100	100	100	100	100	100	100	

4725(u) - 1 - USE OF INFORMATION vs. CLASS OF CHUNK

From this data it was observed that technical status and concept information is used as
extent.

47-25	A	B	C	D	E	F	G	
A	5	3	4	3	6	30	2	6
	169	107	123	90	176	928	55	17
	45	75	64	67	65	73	73	
B	10	3	4	1	5	21	1	3
	73	19	29	10	40	152	9	2
	19	13	15	7	15	12	12	
C	14					14	14	
	1					1	1	
D	4	9	4	4	4	30		17
	1	2	1	1	1	7		
		1	1	1		1		
E	25		8	25	8			
	3		1	3	1			
	1		1	2				
BLNK	17	2	5	4	7	24	1	1
	132	15	37	30	51	189	10	
	35	10	19	22	19	15	13	
RO OF		1		1	1	- 1	1	
TOTAL	8	3	4	3	6	27	2	5
	379	143	191	134	269	1277	75	21
	100	100	100	100	100	100	100	

3643(u) - 1 - DESIRED RETRIEVAL TIME vs. FIRST SOURCE

When the desired retrieval time for information is under one week, colleagues, one's own collection, and department files seem to be heavily used as a first source of information. As the retrieval time increases, there is a tendency to assign a subordinate to locate the required information.

36-42	A	B	C	D	E	F	G	H	I	J	K	L	BLNK	RD OF	TOTAL
A	12	2	2	1	21	1	8	16	24	1	5	8	1	- 2	100
	86	16	18	7	153	8	58	117	175	5	34	56	5		738
	17	17	10	13	16	22	28	19	21	26	16	27	1		16
B	9	2	4	1	27	1	2	20	26	1	5	5		- 3	100
	53	11	23	6	165	4	12	121	159	4	28	28	3		617
	11	12	13	11	17	11	6	20	19	21	13	14			13
C	6	2	4	1	30	1	5	19	23		5	4			100
	64	22	44	10	302	6	45	186	225	3	50	38	3		998
	13	24	25	18	31	16	22	31	27	16	23	19			21
D	8	3	5	3	26	1	6	15	19		8	5		1	100
	66	26	39	23	217	11	50	125	157	3	66	45	1		829
	13	28	22	42	22	30	24	21	19	16	31	22			18
E	8	3	12	1	25	2	8	10	18	1	8	5		- 1	100
	23	9	35	4	74	6	23	30	53	3	25	14	1		300
	5	10	20	7	8	16	11	5	6	16	12	7			6
F	15	2	6		25	1	8	8	20	1	5	10		- 1	100
	27	4	11		46	2	15	15	37	1	9	19			186
	5	4	6		5	5	7	2	5	5	4	9			4
G	83	2	1	1	4			5	3					1	100
	175	5	3	2	8			10	7			1	1		212
	35	5	2	4	1			2	1						5
BLNK					1				1				96	2	100
	2		2	3	7		3	4	7		3	4	272		807
			1	5	1		1	1	1		1	2	98		17
RD OF	1		1		- 1		1	- 1	1				1		
TOTAL	11	2	4	1	21	1	4	13	17		5	4	17		100
	496	93	175	55	972	37	206	608	820	19	215	205	786		4687
	100	100	100	100	100	100	100	100	100	100	100	100	100		100

4735(u) - 1 - USE OF INFORMATION vs. CLASS OF CHUNK

From this data it was observed that technical status and concept information is used as background knowledge to a considerable extent.

47-25	A	B	C	D	E	F	G	H	I	J	K	L	M	RD OF	TOTAL
A	5	3	4	3	6	30	2	6	17	8	4	7	6	- 1	100
	169	107	123	90	176	928	55	179	543	265	115	215	177		3142
	45	75	64	67	65	73	73	83	79	51	60	62	69		67
B	10	3	4	1	5	21	1	3	11	20	4	9	7	1	100
	73	19	29	10	40	152	9	23	83	148	29	63	52		730
	19	13	15	7	15	12	12	11	12	29	15	18	20		16
C	14					14	14			29		14	14	1	100
	1					1	1			2		1	1		7
							1								
D	4	9	4	4	4	30		17	9	9		4	4	2	100
	1	2	1	1	1	7		4	2	2		1	1		23
		1	1	1		1		2							
E	25		8	25	8				8	17		8		1	100
	3		1	3	1				1	2		1			12
	1		1	2											
BLNK	17	2	5	4	7	24	1	1	8	13	6	9	3		100
	132	15	37	30	51	189	10	9	61	98	48	67	26		773
	35	10	19	22	19	15	13	4	9	19	25	19	10		16
RD OF		1		1	1	- 1	1			1		1	1		1
TOTAL	8	3	4	3	6	27	2	5	15	11	4	7	5		100
	379	143	191	134	269	1277	75	215	690	517	192	348	257		4687
	100	100	100	100	100	100	100	100	100	100	100	100	100		100

4828 - 2 - POST TASK INFORMATION vs. MEDIA

No outstanding features were observed from the data presented in this table.

48-28	A	B	C	D	K	M	P	R	S	
A	10 113 13	29 331 15	3 30 12	7 84 15	6 68 11	1 7 19	6 72 19	21 239 19	8 85 19	1
B	11 758 87	29 1937 85	3 229 88	7 493 85	9 565 89	30 81	5 301 79	16 1048 81	5 355 80	1
BLNK	2 1	13 8	2 1	3 2	2 1		10 6 2	3 2	10 6 1	
NO DF										
TOTAL	11 872 100	29 2276 100	3 260 100	7 579 100	8 634 100	37 100	5 379 100	17 1289 100	6 446 100	1

4828(u) - 2 - POST TASK INFORMATION vs. MEDIA

No outstanding features were observed from the data presented in this table.

48-28	A	B	C	D	E	F	G	H	I	J	K	L	M	N	O	P
A	3 29 19	2 20 19	2 21 9	2 22 9	1 7 37	1 14 12	5 51 15	24 269 15	1 11 14	4 10	4 45 10	4 40 18	4 40 13	1 7 19	1 14 13	1 11 22
B	2 121 81	1 84 81	3 210 91	3 226 91	12 63	2 105 88	4 289 85	24 1579 85	1 69 86	1 35 90	6 400 90	3 186 82	4 272 87	30 81	1 91 87	1 37 76
BLNK			2 1				2 1	11 7					3 2 1			2 1 2
NO DF													- 1			
TOTAL	2 150 100	1 104 100	3 232 100	3 248 100	19 100	2 119 100	4 341 100	24 1855 100	1 80 100	1 39 100	6 445 100	3 226 100	4 314 100	37 100	1 105 100	1 49 100

IIA

resented in this table.

K	N	P	R	S	T	V	W	Z	AD	DF	TOTAL
	1	6	21	8	1	6	1	1			100
8	7	72	236	85	14	62	15	7			1127
11	19	19	19	19	23	7	18	15			14
		5	18	5	1	11	1	1	1		100
5	30	301	1048	355	46	735	67	38			6602
89	81	79	81	80	77	89	82	83			85
		10	3	10		54		2	- 1		100
1		6	2	6		33		1			61
		2		1		4		2			1
		5	17	6	1	11	1	1			100
4	37	379	1289	444	60	830	82	46			7790
00	100	100	100	100	100	100	100	100			100

L	M	N	O	P	Q	R	S	T	U	V	W	X	Y	Z	AD	DF	TOTAL
4	4	1	1	1	1	20	8	1	5	6	1	2	1	1	- 2		100
40	40	7	14	11	12	227	85	14	61	62	15	23	16	7			1127
18	13	19	13	22	20	18	19	23	18	7	18	12	10	15			14
3	4		1	1	1	15	5	1	4	11	1	2	2	1	1		100
186	272	30	91	37	47	1001	355	46	264	735	67	165	138	38			6602
82	87	81	87	76	80	81	80	77	80	69	82	87	89	83			85
	3			2		3	10		8	54		2	2	2	- 1		100
	2			1		2	6		5	33		1	1	1			61
	1			2			1		2	4		1	1	2			1
	- 1					1											
3	4		1	1	1	16	6	1	4	11	1	2	2	1	- 1		100
226	314	37	105	49	59	1230	446	60	330	830	82	189	155	46			7790
100	100	100	100	100	100	100	100	100	100	100	100	100	100	100			100

4836(u) - 1 - POST TASK INFORMATION vs. DESIRED RETRIEVAL TIME

4850 See table 5048(u)

This table shows that people who wanted information in one to three months, (considered a long time for one task) found that after the task was completed, they had overlooked a useful piece of information.

4893 See table 9348(u)

48-36	A	B	C	D	E	F	G	BLNK	RD DF	TOTAL
A	15	14	23	18	11	5	4	10		100
	93	86	143	115	68	31	26	63		625
	13	14	14	14	23	17	12	8		13
B	16	13	21	18	6	4	5	18	- 1	100
	639	531	852	711	229	155	186	712		4015
	87	86	85	86	76	83	88	88		86
BLNK	13	6	6	6				68	1	100
	6	3	3	3				32		47
	1			1				4		1
RD DF	- 1	1								
TOTAL	16	13	21	18	6	4	5	17		100
	738	617	998	829	300	186	212	807		4687
	100	100	100	100	100	100	100	100		100

4842(u) - 1 - POST TASK INFORMATION vs. FIRST SOURCE

No outstanding features were observed from the data presented in this table.

48-42	A	B	C	D	E	F	G	H	I	J	K	L	BLNK	RD DF	TOTAL
A	11	2	3	2	21		9	13	20		5	3	10	1	100
	69	15	20	10	131	3	54	82	125	3	34	18	61		625
	14	16	11	18	13	8	26	13	15	16	16	9	8		13
B	11	2	4	1	21	1	4	13	17		5	5	17	- 1	100
	427	78	155	45	837	34	149	524	691	14	181	187	693		4015
	86	84	89	82	86	92	72	86	84	74	84	91	88		86
BLNK					9		6	4	9	4			68		100
					4		3	2	4	2			32		47
							1			11			4		1
RD DF					1		1	1	1	- 1					
TOTAL	11	2	4	1	21	1	4	13	17		5	4	17		100
	496	93	175	55	972	37	206	608	820	19	215	205	786		4687
	100	100	100	100	100	100	100	100	100	100	100	100	100		100

4894 - 1 - POST TASK INFORMATION vs. NATURE OF TASK

No outstanding features were observed from the data presented in this task.

48-94	A	B	C	D	E	F	G	H	I	J	K	L	M	N	RD DF	TOTAL
A	3	12	14	8	7	21	2	1	3	5	4	1	3	17	- 1	100
	5	20	25	13	12	36	3	1	6	8	7	2	6	29		173
	11	15	12	21	13	15	14	3	9	13	11	9	8	12		13
B	4	10	16	4	7	17	2	3	5	5	5	2	3	17		100
	41	114	182	50	82	197	19	31	61	55	58	20	40	198		1148
	89	83	86	79	87	82	86	91	90	87	88	87	53	85		83
BLNK		6	7			11		4	2		2	2	54	13	- 1	100
		3	4			6		2	1		1	1	29	7		54
		2	2			3		6	1		2	4	39	3		4
RD DF											- 1					
TOTAL	3	10	15	5	7	17	2	2	5	5	5	2	5	17		100
	46	137	211	63	94	239	22	34	68	63	66	23	75	234		1375
	100	100	100	100	100	100	100	100	100	100	100	100	100	100		100

4895(u) - 1 - POST TASK INFORMATION vs. TIME SINCE TASK WAS COMPLETED

This table shows the effect elapsed time after the completion of the task has on the discovery of unknown, but existing, data. After completion of a task, no increased amount of information is discovered as the time increases.

48-95	007	014	030	060	120	999	BLNK	RD DF	TOTAL
A	20	5	13	8	1	3	51	- 1	100
	34	8	22	14	1	5	89		173
	12	9	13	15	3	29	13		13
B	22	7	12	7	3	1	48		100
	256	80	139	81	34	12	546		1148
	88	90	85	85	97	71	80		83
BLNK	2	2	6				91	- 1	100
	1	1	3				49		54
		1	2				7		4
RD DF									
TOTAL	21	6	12	7	3	1	50		100
	291	89	164	95	35	17	684		1375
	100	100	100	100	100	100	100		100

5048(u) - 1 - USE OF DDC vs. POST TASK INFORMATION

No outstanding features were observed from the data presented in this table.

50-48	A	B	BLNK	RC OF	TOTAL
A	13	84	3		100
	84	538	18		640
	49	47	33		47
B	12	84	4		100
	89	609	31		729
	51	53	57		53
BLNK		17	83		100
		1	5		6
			9		
RO OF			1		
TOTAL	13	83	4		100
	173	1148	54		1375
	100	100	100		100

5054(u) - 1 - USE OF DDC vs. USE OF TRANSLATIONS

No outstanding features were observed from the data presented in this table.

50-54	A	B	BLNK	RC OF	TOTAL
A	72	28			100
	458	179	3		640
	60	30	38		47
B	42	58			100
	306	423			729
	40	70			53
BLNK		17	83		100
		1	5		6
			63		
RO OF			- 1		
TOTAL	56	44	[illegible]	- 1	100
	764	603	[illegible]		1375
	100	100	100		100

5052(u) - 1 - USE OF DDC vs. USE OF INFORMATION CENTERS

This table shows that people who use DDC tend not to use other information centers.

50-52	A	B	BLNK	RC OF	TOTAL
	71	28	1		100
	453	182	5		640
	60	30	24		47
B	41	58	1		100
	297	422	10		729
	40	70	48		53
BLNK		100			100
			6		6
			29		
RO OF			- 1		
TOTAL	55	44	2	- 1	100
	750	604	21		1375
	100	100	100		100

5056(u) - 2 - USE OF DDC vs. PRESENCE OF INFORMATION PROBLEM

No outstanding features were observed from the data presented in this table.

50-56	A	B	BLNK	RC CF	TOTAL
A	32	64	4		100
	202	411	27		640
	55	45	32		47
B	23	70	7		100
	168	509	52		729
	45	55	62		53
BLNK		17	83		100
		1	5		6
			6		
RD DF					
TOTAL	27	67	6		100
	370	921	84		1375
	100	100	100		100

5256 - 2 - USE OF INFORMATION CENTERS vs. PRESENCE OF INFORMATION PROBLEM

Using the chi squared test with the null hypothesis that the use of information centers is independent of the difficulty in locating information, it was found that at the five percent confidence level the hypothesis should be accepted. This implies that there is no relationship between the use of information centers and a person's problem of locating information.

52-56	A	B	BLNK	RD DF	TOTAL
A	29	67	5	- 1	100
	214	499	37		750
	58	54	44		55
B	25	68	7		100
	153	411	40		604
	41	45	48		44
BLNK	14	52	33	1	100
	3	11	7		21
	1	1	8		2
RD DF					- 1
TOTAL	27	67	6		100
	370	921	84		1375
	100	100	100		100

9325(u) - 2 - LEVEL OF INTELLECT REQUIRED FOR TASK vs. CLASS OF CHUNK

This table shows that persons assigned to tasks of a high intellectual requirement tend to use proportionally more math and formula classes of information.

93-25	A	B	C	D	E	F	G	H	I	J	K	L	M	RD OF	TOTAL
1	8	4	3	3	8	19		5	20	11	3	11	5		100
	9	5	4	3	9	22		6	24	13	4	13	6		118
	2	3	2	2	3	2		3	3	3	2	4	2		3
2	7	3	4	2	6	25	2	5	16	10	5	9	6		100
	96	44	54	23	78	348	30	74	228	144	75	120	87		1401
	25	31	28	17	29	27	40	34	33	28	39	34	34		30
3	8	3	4	3	5	29	1	4	15	12	4	7	5		100
	220	92	121	79	140	801	42	111	411	323	101	206	148		2795
	58	64	63	59	52	62	55	51	59	62	52	59	58		59
4	14	3	10	12	27			7	5	11	4	3	3	1	100
	36	1	9	26	32	71	1	19	13	29	11	8	9		265
	9	1	5	19	12	5	1	9	2	6	6	2	4		6
BLNK	17	1	3	3	9	32	2	5	13	7	1	1	6		100
	18	1	3	3	10	35	2	5	14	8	1	1	7		108
	5	1	2	2	4	3	3	2	2	2	1		3		2
RD OF	1	- 1		1		1		1	1	- 1	- 2	1	- 1		
TOTAL	8	3	4	3	6	27	2	5	15	11	4	7	5		100
	379	143	191	134	269	1277	75	215	690	517	192	348	257		4687
	100	100	100	100	100	100	100	100	100	100	100	100	100		100

9328(u) - 2 - LEVEL OF INTELLECT REQUIRED FOR TASK vs. MEDIA

No outstanding features were observed from the data presented in this table.

93-28	A	B	C	D	E	F	G	H	I	J	K	L	M	N	O	P
1	1 2 1		4 6 3	3 5 2		2 3 3	2 3 1	23 36 2	1 2 3	1 1 3	7 11 2	2 3 1	4 6 2		1 1 1	
2	2 47 31	1 30 29	4 91 39	3 60 26	9 47	1 29 24	3 72 21	24 516 28	1 18 23	1 19 49	7 145 32	3 74 33	5 107 34	1 13 35	2 34 32	1 1
3	2 93 62	1 63 60	3 129 55	3 162 64	9 47	2 84 70	5 240 70	24 1137 61	1 52 65	1 19 49	6 269 60	2 118 52	4 185 58	1 21 57	1 66 63	1
4	1 6 4	2 8 8	1 3 1	1 7 3	1 5	1 1 1	3 14 4	23 115 6	1 7 8		3 13 3	5 24 11	2 9 3	1 3 8	1 3 3	3 1
BLNK	1 2 1	2 3 3	2 3 1	4 8 3		1 2 2	6 11 3	27 51 3	1 2 3		4 7 2	4 7 3	4 7 2		1 1 1	1
RO DF	1	- 1	1		1	- 2	1		- 2	- 1	1					
TOTAL	2 150 100	1 104 100	3 232 100	3 248 100	19 100	2 119 100	4 341 100	24 1855 100	1 80 100	1 39 100	6 445 100	3 226 100	4 314 100	37 100	1 105 100	1

9342(u) - 2 - LEVEL OF INTELLECT REQUIRED FOR TASK vs. FIRST SOURCE

No outstanding features were observed from the data presented in this table.

93-42	A	B	C	D	E	F	G	H	I	J	K	L	BLNK	RO DF	TOTAL
1	14 17 3	3 3 3		1 19 1 2	1 22 2	1 1 3		14 17 3	15 18 2		3 3 1	3 4 2	27 32 4		100 118 3
2	11 157 31	3 37 40	3 42 24	1 23 15 27	1 317 32	1 9 24	3 37 18	14 201 33	17 234 29	1 5	4 56 26	4 58 28	17 237 30	- 1	100 1401 30
3	11 302 60	2 43 46	4 119 68	1 20 33 60	1 569 58	1 5 26 70	5 135 66	12 338 55	17 478 58	1 16 84	5 148 68	5 129 63	16 459 58		100 2795 59
4	6 15 3	3 8 9	1 2 1	2 15 4 7	1 39 4	10 1 3	26 13	14 38 6	30 78 10	1 2 11	2 4 2	2 6 3	16 42 5	- 2	100 265 6
BLNK	5 5 1	2 2 2	11 12 7	2 23 2 4	1 25 3	7 8 4	13 14 2	11 12 1		4 4 2	7 8 4		15 16 2		100 108 2
RO DF	1				1	- 1	1						1		
TOTAL	11 496 100	2 93 100	4 175 100	1 55 100	21 972 100	1 37 100	4 206 100	13 608 100	17 820 100	19 100	5 215 100	4 205 100	17 786 100		100 4687 100

	M	N	O	P	Q	R	S	T	U	V	W	X	Y	Z	RD DF	TOTAL
	4		1		3	11	3	1	1	21	4	4	4	1	- 4	100
3	6		1		4	18	4	1	1	33	6	6	6	1		159
1	2		1		7	1	1	2		4	7	3	4	2		2
	5	1	2	1		15	5	1	2	11	1	4	2	4	- 1	100
74	107	13	34	17	8	335	102	19	36	250	26	80	44	14		2201
33	34	35	32	35	14	27	29	32	11	30	32	42	28	30		28
	4		1		1	17	6	1	5	10	1	2	2	1		100
18	185	21	66	16	45	788	264	39	216	484	44	93	85	28		4749
52	58	57	63	33	76	64	59	65	65	58	54	49	54	61		61
	2	1	1	3		12	13		15	9	1	1	2	1	- 1	100
24	9	3	3	15	1	59	62		73	46	3	7	12	3		495
11	3	8	3	29	2	5	14		22	6	4	4	8	7		6
	4		1	1	1	16	8	1	2	9	2	2	4		- 3	100
7	7		1	1	1	30	14	1	4	17	3	3	8			186
3	2		1	2	2	2	3	2	1	2	4	2	5			2
				1	- 1	1		- 1	1		- 1					1
	4		1	1	1	16	6	1	4	11	1	2	2	1	- 1	100
26	314	37	105	49	59	1230	446	60	330	830	82	189	155	46		7790
100	100	100	100	100	100	100	100	100	100	100	100	100	100	100		100

	BLNK	RD DF	TOTAL
	27		100
	32		118
2	4		3
	17	- 1	100
	237		1401
8	30		30
	16		100
	459		2795
3	58		59
	16	- 2	100
	42		255
3	5		6
	15		100
	16		108
4	2		2
	1		
	17		100
	786		4687
0	100		100

9348(u) - 2 - LEVEL OF INTELLECT REQUIRED FOR TASK vs. POST TASK INFORMATION

This table shows that as the intellectual level of the task increases, there also seems to be a rise in incidents where information is available but unknown during the time of the task.

93-48	A	B	BLNK	RD DF	TOTAL
I	50	50			100
	1	1			2
	1				
J	100				100
	1				1
	1				
O	50	50			100
	1	1			2
	1				
1	4	86	10		100
	2	43	5		50
	1	4	9		4
2	11	88	2	- 1	100
	46	375	8		429
	26	33	15		31
3	14	85	2	- 1	100
	108	648	12		768
	61	56	22		56
4	19	80	1		100
	13	56	1		70
	8	5	2		5
BLNK	7	45	48		100
	4	26	28		58
	2	2	52		4
RD DF	- 1				
TOTAL	13	83	4		100
	173	1148	54		1375
	100	100	100		100

9425 - 1 - NATURE OF TASK vs. CLASS OF CHUNK

This table shows there is little relationship between the class of information used to accomplish a task and the output or nature of the task itself.

94-25	A	B	C	E	F	H	J	N	RD DF	TOTAL
A	20	1	19	9	23	6	19	3		100
	30	1	29	14	35	9	29	5		152
	8	1	3	5	2	4	6	2		3
B	5	12	15	1	40	2	14	11		100
	21	53	70	6	181	8	66	51		456
	6	37	7	2	9	4	13	20		10
C	7	1	21	6	50	2	9	4		100
	51	11	161	49	387	18	68	30		775
	13	8	17	18	20	8	13	12		17
D	11		22	7	33	5	21	1		100
	24	1	49	15	72	11	45	2		219
	6	1	5	6	4	5	9	1		5
E	10		21	19	28	10	8	3	1	100
	32	1	67	62	90	32	25	9		318
	8	1	7	23	5	15	5	4		7
F	10	2	20	8	43	6	7	4		100
	80	15	168	63	354	53	54	35		822
	21	10	18	23	18	25	10	14		18
G	7	2	37		42	3	8	1		100
	6	2	33		37	3	7	1		89
	2	1	4		2	1	1			2
H	10		26	5	40	4	3	10	2	100
	12		30	6	46	5	4	12		115
	3		3	2	2	2	1	5		2
I	6	5	17	1	53	4	10	4		100
	15	12	42	3	131	9	24	9		245
	4	8	4	1	7	4	5	4		5
J	7	6	13	2	39	6	21	6		100
	14	12	28	5	81	13	44	13		210
	4	8	3	2	4	6	9	5		4
K	4	1	30	2	46	3	8	6		100
	10	3	74	4	116	8	21	14		250
	3	2	8	1	6	4	4	5		5
L	1		34	1	47	4	6	6	1	100
	1		26	1	36	3	5	5		77
			3		2	1	1	2		2
M	15	3	10	7	49	3	9	5	- 1	100
	23	4	16	11	75	4	14	7		154
	6	3	2	4	4	2	3	3		3
N	7	3	18	4	40	5	14	8	1	100
	60	28	147	30	326	39	111	64		805
	16	20	16	11	17	18	21	25		17
RD DF				2	- 2	1	- 1	- 2		
TOTAL	8	3	20	6	42	5	11	5		100
	379	143	940	269	1967	215	517	257		4687
	100	100	100	100	100	100	100	100		100

This table shows few outstanding features. This, however, is significant since it implies there is little or no relationship between the media used to acquire the information and the output or nature of the task itself.

94-28	A	B	C	D	K	N	P	R	S	T	V	W	Y	RD DF	TOTAL
A	2 5 1	28 78 3	2 6 2	5 14 2	5 13 2		11 30 8	21 59 5	12 33 7	1 3 5	11 30 4	1 2 2	2 6 13	- 1	100 279 4
B	9 62 7	33 236 10	2 14 5	7 47 8	13 94 15	1 3	2 13 3	18 129 10	1 9 2	1 9 15	11 81 10	1 6 7	1 9 20	1	100 710 9
C	18 222 25	29 356 16	4 47 18	9 111 19	6 75 12	1 11 30	3 35 9	13 160 12	7 81 18	6 10	10 127 15	6 7	1 7 15	- 1	100 1244 16
D	3 11 1	27 99 4	2 8 3	9 32 6	3 11 2		19 69 18	13 46 4	10 38 9	1 3 5	11 40 5	2 6 7	1 2 4	- 1	100 365 5
E	4 19 2	32 163 7	2 10 4	15 75 13	6 33 5	1 3	4 20 5	16 82 6	9 47 11	1 3 5	7 35 4	5 25 30	1 2	- 1	100 514 7
F	10 131 15	25 327 14	4 57 22	7 95 16	9 115 18	5 14	7 95 25	17 229 18	8 113 25	1 18 30	9 126 15	1 19 23	2 4	2	100 1332 17
G	16 22 3	29 41 2	7 10 4	1 2	13 18 3	1 2 5	1 2 1	13 18 1	4 6 1		14 20 2			1	100 141 2
H	7 12 1	26 45 2	1 2 1	5 9 2	8 14 2	3 5 14	10 17 4	12 21 2	2 4 1		23 40 5	3 5 6	1 1 2	- 1	100 175 2
I	21 90 10	32 138 6	3 11 4	6 27 5	9 37 6		3 14 4	13 58 4	3 12 3	1 2	9 38 5	2 2	2 4	1	100 430 6
J	10 36 4	28 102 4	2 7 3	5 18 3	12 45 7	2 9 24	5 17 4	22 81 6	5 20 4	1 3 5	7 27 3	1 2 2	1 2		100 368 5
K	12 55 6	32 141 6	4 16 6	7 32 6	10 45 7	1 3	3 13 3	17 74 6	4 16 4	1 2	11 47 6	2 2	2 4		100 445 6
L	15 19 2	31 38 2	5 6 2	13 16 3	5 6 1		1 1	16 20 2	2 2		12 15 2	1 1 1		- 1	100 124 2
M	9 23 3	37 95 4	4 11 4	5 13 2	6 16 3		4 10 3	15 40 3	5 13 3	1 2	14 36 4	1 1		1	100 259 3
N	12 165 19	30 417 18	4 55 21	6 88 15	8 112 18	2 5	3 43 11	19 272 21	4 52 12	1 12 20	12 168 20	5 6	1 13 28		100 1404 18
RD DF	1	2	1		- 1	- 1	2			- 1		4	2		- 2
TOTAL	11 872 100	29 2276 100	3 260 100	7 579 100	8 634 100	37 100	5 379 100	17 1289 100	6 446 100	1 60 100	11 830 100	1 82 100	1 46 100		100 7790 100

No outstanding features were obser ed from the data presented in this table.

94-36	A	B	C	D	E	F	G	BLNK	RD DF	TOTAL
A	32 49 7	3 4 1	14 21 2	20 31 4	3 4 1	3 5 3	1 2 1	24 36 4		100 152 3
B	12 53 7	16 71 12	27 125 13	15 68 8	7 30 10	3 12 6	4 17 8	18 80 10	- 2	100 456 10
C	18 141 19	16 123 20	19 150 15	18 137 17	6 44 15	3 23 12	5 38 18	15 119 15		100 775 17
D	29 63 9	8 17 3	15 33 3	17 38 5	7 16 5	2 5 3	2 4 2	20 43 5		100 219 5
E	25 78 11	14 45 7	25 79 8	12 37 4	4 13 4	3 10 5	7 21 10	11 35 4	- 1	100 318 7
F	15 121 16	16 131 21	21 175 18	16 128 15	7 60 20	6 46 25	4 36 17	15 125 15		100 822 18
G	21 19 3	7 6 1	17 15 2	16 14 2	12 11 4	3 3 2	1 1	22 20 2	1	100 89 2
H	6 7 1	10 12 2	23 26 3	17 20 2	6 7 2	1 1 1	3 3 1	34 39 5		100 115 2
I	13 29 4	9 30 4	20 46 5	22 52 6	11 25 8	5 14 6	6 17 7	14 34 4		100 245 7
J	2 5 1	21 44 7	25 53 5	16 34 4	10 22 7	7 15 8	3 6 3	15 31 4	1	100 210 4
K	13 33 4	12 30 5	20 51 5	17 42 5	6 16 5	4 10 5	8 20 9	19 48 6	1	100 250 5
L	22 17 2	21 16 3	19 15 2	16 12 1	4 3 1	1 1 1	1 1	16 12 1		100 77 2
M	8 5 1	13 8 1	15 9 1	20 12 1	10 6 2	7 4 2	2 1	26 16 2	- 1	100 61 1
N	13 101 14	9 75 12	23 182 18	23 183 22	4 31 10	5 37 20	5 43 20	19 153 19	- 1	100 805 17
BLNK	18 17 2	8 7 1	19 18 2	23 21 3	13 12 4	2 2 1	17 16 2			100 93 2
RD DF	- 1	- 2	1	2		2	2			
TOTAL	16 738 100	13 617 100	21 998 100	18 829 100	6 300 100	4 186 100	5 212 100	17 807 100		100 4687 100

NATURE OF TASK vs. DEPTH OF INFORMATION WANTED

No outstanding features were observed from the data presented in this table.

94-39	A	B	C	D	BLNK	RD OF	TOTAL
A	14	51	14		20	1	100
	21	78	22		31		152
	3	4	2		4		3
B	25	36	21		18		100
	114	166	94		82		456
	16	8	9		10		10
C	11	42	32		15		100
	85	327	245		118		775
	12	15	23		15		17
D	8	49	25		18		100
	17	107	55		40		219
	2	5	5		5		5
E	9	52	28		11		100
	28	165	89		36		318
	4	8	9		5		7
F	12	53	20		15		100
	100	435	166	1	120		822
	14	20	16	33	15		18
G	9	60	9		22		100
	8	53	8		20		89
	1	2	1		3		2
H	7	31	28		34		100
	8	36	32		39		115
	1	2	3		5		2
I	18	44	23		14	1	100
	45	107	59		34		245
	7	5	6		4		5
J	25	46	15		14		100
	52	97	31		30		210
	7	5	3		4		4
K	15	48	17		19	1	100
	38	121	42	1	48		250
	5	6	4	33	6		5
L	4	44	36		16		100
	3	34	28		12		77
		2	3		2		2
M	21	33	20		26		100
	13	20	12		16		81
	2	1	1		2		1
N	19	44	19		19	- 1	100
	152	354	149	1	149		805
	22	16	14	33	19		17
BLNK	17	55	12		16		100
	16	51	11		15		93
	2	2	1		2		2
RD OF	2	- 1		1	- 1		
TOTAL	15	46	22		17		100
	700	2151	1043	3	790		4687
	100	100	100	100	100		100

9442 - 1 - NATURE OF TASK vs. FIRST SOURCE

This table shows relatively few outstanding features, which is, nevertheless, significant since it implies that there is little or no relationship between the output or nature of the tasks and the use of the first source to obtain information.

94-42	A	B	E	F	H	I	K	L	RD DF	TOTAL
A	5	6	22	13	9	20	1	24		100
	8	9	33	20	13	31	1	37		152
	2	3	3	8	2	4		4		3
B	9	8	26	3	13	14	5	22		100
	40	36	119	14	58	64	24	101		456
	8	13	12	6	10	8	10	10		10
C	11	5	22	4	16	17	5	19	1	100
	87	35	174	33	127	128	42	149		775
	18	13	17	14	21	16	18	15		17
D	5	9	17	12	10	25		22		100
	10	19	37	27	21	55	1	49		219
	2	7	4	11	3	7		5		5
E	17	3	19	5	16	23	3	15	- 1	100
	53	9	62	15	50	72	10	47		318
	11	3	6	6	8	9	4	5		7
F	10	5	23	6	13	19	5	19		100
	80	37	190	52	106	159	38	160		822
	16	14	19	21	17	19	16	16		18
G	1		44	8	7	10	2	28		100
	1		39	7	6	9	2	25		89
			4	3	1	1	1	3		2
H	18	6	17		6	16	1	37	- 1	100
	21	7	19		7	18	1	42		115
	4	3	2		1	2		4		2
I	15	7	20	4	15	18	6	15		100
	36	17	50	9	37	45	14	37		245
	7	6	5	4	6	5	6	4		5
J	5	4	17	7	12	31	8	17	- 1	100
	10	8	36	14	26	65	16	35		210
	2	3	4	6	4	8	7	4		4
K	17	5	24	4	11	12	5	22		100
	42	12	61	9	28	31	13	54		250
	8	4	6	4	5	4	6	5		5
L	8	9	25	4	19	12	5	18		100
	6	7	19	3	15	9	4	14		77
	1	3	2	1	2	1	2	1		2
M	6	11	22	7	10	8	6	29	1	100
	9	17	34	11	15	13	10	45		154
	2	6	3	5	2	2	4	5		3
N	12	7	19	4	12	15	7	24		100
	93	55	154	29	99	121	58	196		805
	19	21	15	12	16	15	25	20		17
RD DF		1	- 2	- 1	2	- 1	1	- 1		
TOTAL	11	6	22	5	13	17	5	21		100
	496	268	1027	243	608	820	234	991		4687
	100	100	100	100	100	100	100	100		100

6.5 THREE-WAY TABLES

This series of four tables shows how media are used in relation to both the kind of person and the kind of task. In almost all cases, the oral media is the most heavily used.

10A Research People: KIND OF TASK vs. MEDIA

14-28	A	B	C	D	K	N	P	R	S	T	V	W	Z	RD DF	TOTAL
A	5	24	2	7	4		20	11	14	1	10	1	1		100
	43	218	22	67	36	2	186	103	127	6	93	11	8		922
	68	71	69	78	60	40	87	66	88	55	72	58	80		74
B	10	28	5	1	3		10	23	5	1	11	1	1	1	100
	14	40	7	2	4		14	32	7	2	16	2	1		141
	22	13	22	2	7		7	21	5	18	12	11	10		11
C		38		13				13		25	13			- 2	100
		3		1				1		2	1				8
		1		1				1		18	1				1
D	4	29	2	11	15	2	8	12	4		9	3	1		100
	5	40	3	15	20	3	11	16	6		13	4	1		137
	8	13	9	17	33	60	5	10	4		10	21	10		11
E	3	23		3			7	13	17	3	23	7			100
	1	7		1			2	4	5	1	7	2			30
	2	2		1			1	3	3	9	5	11			2
RD DF				1				- 1				- 1			1
TOTAL	5	25	3	7	5		17	13	12	1	11	2	1	- 2	100
	63	308	32	86	60	5	213	156	145	11	130	19	10		1238
	100	100	100	100	100	100	100	100	100	100	100	100	100		100

10b Engineering People: KIND OF TASK vs. MEDIA

14-28	A	B	C	D	K	N	P	R	S	T	V	W	Z	RD DF	TOTAL
A	4	27	1	5	10		11	23	14		4			1	100
	3	20	1	4	7		8	17	10		3				73
	1	2	1	2	2		9	2	5		1				2
B	13	30	4	7	8	1	2	19	5	1	10	)		- 1	100
	398	897	114	208	229	21	73	555	151	19	304	18	12		2999
	85	79	84	80	72	88	80	79	79	66	80	62	80		81
C	10	30	7	4	15	1	1	16	2		13	1			100
	13	41	9	6	21	1	1	22	3		18	1			136
	3	4	7	2	7	4	1	3	2		5	3			4
D	11	31	2	8	9		2	20	4	2	9	2			100
	47	138	9	37	40		8	90	19	9	40	9	1		447
	10	12	7	14	13		9	13	10	31	11	31	7		12
E	7	30	3	4	16	2	1	15	6	1	13	1	2	- 1	100
	8	35	3	5	19	2	1	18	7	1	15	1	2		117
	2	3	2	2	6	8	1	3	4	3	4	3	13		3
RD DF	- 1		- 1								- 1	1			- 1
TOTAL	12	30	4	7	8	1	2	19	5	1	10	1			100
	469	1131	136	260	316	24	91	702	190	29	380	29	15		3772
	100	100	100	100	100	100	100	100	100	100	100	100	100		100

10C Reliability-Q.C. People: KIND OF TASK vs. MEDIA

14-28	A	B	C	D	K	N	P	R	S	T	V	W	Z	RD DF	TOTAL
B	21 18 46	15 13 18	4 3 27	6 5 17	11 9 27	5 4 100	1 1 9	23 19 43	1 1 6		8 7 25	1 1 33	4 3 100		100 84 28
C	11 20 51	27 52 71	4 7 64	11 21 72	11 21 64		5 10 91	12 22 50	8 15 94	1 2 100	9 18 64	1 2 67			100 190 64
D	7 1 3	27 4 5	7 1 9	20 3 10	20 3 9						20 3 11			- 1	100 15 5
E		57 4 5						43 3 7							100 7 2
RD DF		1		1											1
TOTAL	13 39 100	25 73 100	4 11 100	10 29 100	11 33 100	1 4 100	4 11 100	15 44 100	5 16 100	1 2 100	9 28 100	1 3 100	1 3 100		100 296 100

10D R&D Support People: KIND OF TASK vs. MEDIA

14-28	A	B	C	D	K	N	P	R	S	T	V	W	Z	RD DF	TOTAL
A		31 4 1		15 2 1			23 3 7	8 1	8 1 1		15 2 1				100 13 1
B	19 55 24	29 83 15	3 8 13	6 17 11	9 25 16	1 33	2 5 11	14 40 14	4 13 18	1 4 31	11 32 16	1 4 14	1 4 24		100 291 16
C	4 1	46 12 2			12 3 2		8 2 5	8 2 1			19 5 3		4 1 6	- 1	100 26 1
D	12 169 72	31 442 79	4 51 85	10 139 86	9 125 80	2 67	2 29 66	16 224 79	4 51 70	1 7 54	11 156 79	1 21 75	1 12 71	- 1	100 1428 78
E	12 9 4	28 21 4	1 1 2	4 3 2	4 3 2		7 5 11	23 17 6	11 8 11	3 2 15	3 2 1	4 3 11			100 74 4
RD DF		- 1											- 1		
TOTAL	13 234 100	31 562 100	3 60 100	9 161 100	9 156 100	3 100	2 44 100	16 284 100	4 73 100	1 13 100	11 197 100	2 28 100	1 17 100	- 2	100 1832 100

102514 - 1 - KIND OF ACTIVITY vs. CLASS OF CHUNK vs. KIND OF TASK

This series of four tables shows how the classes of information are used in relation to both the kind of person and the kind of task.

10A Research People: CLASS OF CHUNK vs. KIND OF TASK

25-14	A	B	C	D	E	RD DF	TOTAL
A	82 72 14	4 4 5	1 1 20	9 8 11	3 3 14	1	100 89 13
B	60 3 1			40 2 3			100 5 1
C	79 123 24	10 15 20		10 16 22	1 2 9		100 156 22
E	83 44 8	9 5 7		8 4 5			100 53 8
F	72 146 28	15 30 39	1 3 60	10 20 27	1 3 14	1	100 202 29
H	56 28 5	14 7 9		22 11 15	8 4 18		100 50 7
J	71 71 14	11 11 14		11 11 15	7 7 32		100 100 14
M	75 30 6	10 4 5	3 1 20	5 2 3	8 3 14	- 1	100 40 6
RD DF		1		- 1	- 1		
TOTAL	75 518 100	11 76 100	1 5 100	11 74 100	3 22 100	- 1	100 695 100

10B Engineering People: CLASS OF CHUNK vs. KIND OF TASK

25-14	A	B	C	D	E	RD DF	TOTAL
A	7 13 30	74 136 7	4 7 8	14 25 10	2 4 5	- 1	100 185 8
B	2 2 5	84 68 4	1 1 1	7 6 2	5 4 5	1	100 81 3
C	1 4 9	80 349 19	4 19 21	11 50 19	3 13 17	1	100 435 19
E	3 4 9	79 94 5	6 7 8	11 13 5	1 1 1		100 119 5
F	1 10 23	83 858 46	4 44 49	10 99 38	3 28 37	- 1	100 1039 45
H	1 1 2	81 84 5	5 5 6	10 10 4	4 4 5	- 1	100 104 4
J	4 10 23	76 185 10	1 2 2	14 35 14	5 11 14		100 243 10
M		70 83 4	4 5 6	17 20 8	9 11 14		100 119 5
RD DF	- 1		- 1		2		1
TOTAL	2 44 100	80 1857 100	4 90 100	11 258 100	3 76 100		100 2325 100

10C Reliability-Q.C. People: CLASS OF CHUNK vs. KIND OF TASK

25-14	B	C	D	E	RD DF	TOTAL
A	10	80	10			100
	1	8	1			10
	2	8	8			6
B	50	50				100
	1	1				2
	2	1				1
C	30	63	5	2		100
	17	36	3	1		57
	32	37	25	33		34
E	38	62				100
	5	8				13
	9	8				8
F	36	52	9	3		100
	24	34	6	2		66
	45	35	50	67		40
H	33	67				100
	2	4				6
	4	4				4
J	33	33	33		1	100
	2	2	2			6
	4	2	17			4
M	17	83				100
	1	5				6
	2	5				4
RD DF						- 1
TOTAL	32	59	7	2		100
	53	98	12	3		166
	100	100	100	100		100

10D R&D Support People: CLASS OF CHUNK vs. KIND OF TASK

25-14	A	B	C	D	E	RD DF	TOTAL
A		19	4	73	4		100
		13	3	51	3		70
		8	18	6	8		6
B		9	3	82	6		100
		3	1	27	2		33
		2	6	3	5		3
C	3	13	1	82	2	- 1	100
	6	29	2	188	5		230
	67	17	12	22	13		21
E		14		82	4		100
		10		59	3		72
		6		7	8		7
F		16	1	80	3		100
	1	77	3	382	12		475
	11	45	18	45	32		43
H		23		55	23	- 1	100
		9		22	9		40
		5		3	24		4
J	2	18	2	77	2	- 1	100
	2	21	2	88	2		115
	22	12	12	10	5		11
M		14	11	72	4	- 1	100
		8	6	41	2		57
		5	35	5	5		5
RD DF			- 1	- 1			
TOTAL	1	16	2	79	3	- 1	100
	9	170	17	858	38		1092
	100	100	100	100	100		100

his series of four tables shows how first sources of information are used in elation to both the kind of person and the kind of task.

10A Research People: FIRST SOURCE vs. KIND OF TASK

esearch people doing research tasks use as their first source of information eir own collection 24 percent, a colleague 16 percent, and a library 14 per- ent of the time.

62-14	A	B	C	D	E	RD DF	TOTAL
A	65	15	3	18		- 1	100
	40	9	2	11			62
	8	12	40	15			9
B	69	14		17			100
	20	4		5			29
	4	5		7			4
E	72	11	2	10	5		100
	84	13	2	12	6		117
	16	17	40	16	27		17
F	90	5		5			100
	70	4		4			78
	14	5		5			11
H	79	12		7	3	- 1	100
	60	9		5	2		76
	12	12		7	9		11
I	74	11		12	3		100
	125	18		20	5		168
	24	24		27	23		24
K	67	20			13		100
	10	3			2		15
	2	4			9		2
L	73	11	1	11	5	- 1	100
	109	16	1	17	7		150
	21	21	20	23	32		22
) DF	- 1						
OTAL	75	11	1	11	3	- 1	100
	518	76	5	74	22		695
	100	100	100	100	100		100

10B Engineering People: FIRST SOURCE vs. KIND OF TASK

Engineering people doing engineering tasks use as their first source of information their own collection 15 percent, a colleague 23 percent, and department files 14 percent of the time.

42-14	A	B	C	D	E	RD DF	TOTAL
A	1	81	2	13	2	1	100
	3	201	6	32	5		247
	7	11	7	12	7		11
B	1	81	2	15	2	- 1	100
	1	106	3	19	2		131
	2	6	3	7	3		6
E	2	78	5	10	5		100
	11	427	29	57	26		550
	25	23	32	22	34		24
F	6	83		8	3		100
	7	93		9	3		112
	16	5		3	4		5
H	1	82	4	11	2		100
	4	266	13	36	6		325
	9	14	14	14	8		14
I	3	76	3	15	3		100
	11	287	11	57	12		378
	25	15	12	22	16		16
K	3	83	6	8	1	- 1	100
	4	119	8	11	2		144
	9	6	9	4	3		6
L	1	82	5	8	5	- 1	100
	3	358	20	37	20		438
	7	19	22	14	26		19
RD DF		1	1	2	- 1		- 1
TOTAL	2	80	4	11	3		100
	44	1857	90	258	76		2325
	100	100	100	100	100		100

10C Reliability-Q.C. People: FIRST SOURCE vs. KIND OF TASK

This table shows no outstanding features mainly because the sample of reliability-quality control people and tasks is quite small.

42-14	B	C	D	E	RD DF	TOTAL
A	37	63				100
	7	12				19
	13	12				11
B	50	50				100
	4	4				8
	8	4				5
E	34	63	3			100
	11	20	1			32
	21	20	8			19
F	25	75				100
	1	3				4
	2	3				2
H	18	59	23			100
	4	13	5			22
	8	13	42			13
I	33	52	6	9		100
	11	17	2	3		33
	21	17	17	100		20
K	56	44				100
	5	4				9
	9	4				5
L	26	64	10			100
	10	25	4			39
	19	26	33			23
RD DF	- 1	1				2
TOTAL	32	59	7	2		100
	53	98	12	3		166
	100	100	100	100		100

10D R&D Support People: FIRST SOURCE vs. KIND OF TASK

This table shows that R&D support people doing R&D support tasks use as their first source of information their own collection 18 percent, a colleague 24 percent, and task assignment 12 percent of the time. This table shows some of the effects of the large number of math and programmer type people who are classed as R&D support, and characteristically receive a large amount of their work with the task assignment.

42-14	A	B	C	D	E	RD DF	TOTAL
A		14		83	3		100
		18		106	4		128
		11		12	11		12
B		15	11	74			100
		10	7	49			66
		6	41	6			6
E	1	14		83	2		100
	3	36	1	210	4		254
	33	21	6	24	11		23
F		17		83			100
		6		29			35
		4		3			3
H	1	30		67	2		100
	1	40		90	3		134
	11	24		10	8		12
I	2	10	2	80	7	- 1	100
	3	20	3	152	13		191
	33	12	18	18	34		17
K		13	3	70	15	- 1	100
		5	1	28	6		40
		3	6	3	16		4
L	1	14	2	80	3		100
	2	35	5	194	8		244
	22	21	29	23	21		22
RD DF	1	- 2		1	- 1		1
TOTAL	1	16	2	79	3	- 1	100
	9	170	17	858	38		1092
	100	100	100	100	100		100

171214 - 1 - MAN-DAYS OF TASK vs. FIELD OF TASK vs. KIND OF TASK

This series of four tables shows the effect of the change in level of effort of tasks in relation to the field of the task and the kind of task. The outstanding feature of these tables is that as the level of effort of the task increases, there is no change in either the field of the task or the kind of task.

17-005 One Man-Week or Under. FIELD OF TASK vs. KIND OF TASK

12-14	A	B	C	D	E	RD OF	TOTAL
01		83	2	5	10		100
		35	1	2	4		42
		10	3	1	6		6
02	60	10		30			100
	6	1		3			10
	10			1			1
03	19	52	5	24			100
	4	11	1	5			21
	7	3	3	2			3
05	1	63	4	31	1		100
	1	73	5	36	1		116
	2	20	14	17	2		16
06		68		24	8		100
		25		9	3		37
		7		4	5		5
10		54	7	39			100
		15	2	11			28
		4	6	5			4
11		50	13	13	25	- 1	100
		4	1	1	2		8
		1	3		3		1
12		69	5	17	9		100
		40	3	10	5		58
		11	8	5	8		8
14	15	55	15	10	5		100
	3	11	3	2	1		20
	5	3	8	1	2		3
15	30	10	10	50			100
	3	1	1	5			10
	5		3	2			1
16	46	20	3	23	9	- 1	100
	16	7	1	8	3		35
	27	2	3	4	5		5
22	4	75	7	9	4	1	100
	3	51	5	6	3		68
	5	14	14	3	5		9
25	46	32	3	16	3		100
	17	12	1	6	1		37
	28	3	3	3	2		5
26		47	12	29	12		100
		8	2	5	2		17
		2	6	2	3		2
30	3	21	4	69	4	- 1	100
	3	23	4	77	4		111
	5	6	11	36	6		15
31		71	5	10	14		100
		15	1	2	3		21
		4	3	1	5		3
34	4	53	8	29	6		100
	2	27	4	15	3		51
	3	7	11	7	5		7
36	4	4	2	20	69	1	100
	2	2	1	9	31		45
	3	1	3	4	47		6
RD OF		2	- 2	2	-		
TOTAL	8	49	5	29	9		100
	60	361	36	212	66		735
	100	100	100	100	100		100

17-022 One Man-Month or Under. FIELD OF TASK vs.

12-14	A	B	C	D	E
01		84	4	8	4
		21	1	2	1
		10	6	2	5
02	45	27		27	
	5	3		3	
	9	1		3	
03	50	40	10		
	5	4	1		
	9	2	6		
05	5	73	2	16	4
	3	40	1	9	2
	5	19	6	8	9
06	12	76		12	
	2	13		2	
	4	6		2	
10	10	80		10	
	1	8		1	
	2	4		1	
11		100			
		1			
12	7	61	11	18	4
	2	17	3	5	1
	4	8	17	5	5
14	23	46		15	15
	3	6		2	2
	5	3		2	9
15	27	9	9	45	9
	3	1	1	5	1
	5		6	5	5
16	68	20		8	4
	17	5		2	1
	30	2		2	5
22	3	68	13	11	5
	1	26	5	4	2
	2	13	28	4	9
25	32	45		23	
	7	10		5	
	12	5		5	
26	13	38	25	25	
	1	3	2	2	
	2	1	11	2	
30	1	31		65	3
	1	23		49	2
	2	11		45	9
31		60	10	10	20
		6	1	1	2
		3	6	1	9
34	12	45	9	27	6
	4	15	3	9	2
	7	7	17	8	9
36	10	20		40	30
	2	4		8	6
	4	2		7	27
RD OF	- 2	3	- 3	- 2	- 1
TOTAL	14	50	4	26	5
	57	206	18	109	22
	100	100	100	100	100

17-022 One Man-Month or Under FIELD OF TASK vs. KIND OF TASK

12-14	A	B	C	D	E	RD OF	TOTAL
01	84	4	8	4			100
	21		1	2	1		25
	10		6	2	5		6
02 45	27		27			1	100
	3		3				11
	1		3				3
03 50	40	10					100
	4		1				10
	2		6				2
05 5	73	2	16	4			100
	40		1	9	2		55
	19		6	8	9		13
06 12	76		12				100
	13		2				17
	6		2				4
10 10	80		10				100
	8		1				10
	4		1				2
11	100						100
	1						1
12 7	61	11	18	4		- 1	100
	17	3	5		1		28
	8	17	5		5		7
14 23	46		15	15		1	100
	6		2	2			13
	3		2	9			3
15 27	9	9	45	9		1	100
	1	1	5		1		11
		6	5		5		3
16 68	20		8	4			100
17	5		2		1		25
30	2		2		5		6
22 3	68	13	11	5			100
	26	5	4		2		38
	13	28	4		9		9
25 32	45		23				100
7	10		5				22
12	5		5				5
26 13	38	25	25			- 1	100
	3	2	2				8
	1	11	2				2
30 1	31		65	3			100
	23		49		2		75
	11		45		9		18
31	60	10	10	20			100
	6	1	1		2		10
	3	6	1		9		2
34 12	45	9	27	6		1	100
4	15	3	9		2		33
7	7	17	8		9		8
36 10	20		40	30			100
2			8	6			20
4	2		7	27			5
RD OF - 2	3	- 3	- 2	- 1			2
TOTAL 14	50	4	26	5	1		100
57	206	18	109	22			412
100	100	100	100	100			100

17-132 Six Man-Months or Under FIELD OF TASK vs. KIND OF TASK

12-14	A	B	C	D	E	RD OF	TOTAL
01	89	11					100
	8	1					9
	7	17					5
02 50	25		25				100
2	1		1				4
5	1		3				2
03 43	29	14	14				100
3	2	1	1				7
7	2	17	3				4
05 15	74	4	4	4	- 1		100
4	20	1	1	1			27
10	19	17	3	14			14
06	67		33				100
	4		2				6
	4		6				3
10	80		20				100
	4		1				5
	4		3				3
12 7	79	14					100
1	11	2					14
2	10	33					7
14 25	50		25				100
3	6		3				12
7	6		9				6
15	20		80				100
	1		4				5
	1		12				3
16 64	29		7				100
9	4		1				14
22	4		3				7
22 7	80	7		7	- 1		100
1	12	1		1			15
2	11	17		14			8
25 64	32		5		- 1		100
14	7		1				22
34	7		3				11
26	100						100
	5						5
	5						3
30 4	41		56		- 1		100
1	11		15				27
2	10		44				14
31	100						100
	7						7
	7						4
34 27	36		9	27	1		100
3	4		1	3			11
7	4		3	43			6
36			60	40			100
			3	2			5
			9	29			3
RD OF 2	- 2	- 1	- 1				- 3
TOTAL 21	55	3	17	4			100
41	107	6	34	7			195
100	100	100	100	100			100

17-132 Six Man-Months or Under. FIELD OF TASK vs. KIND OF TASK

12-14	A	B	C	D	E	RD OF	TOTAL
01	89 8 7	11 1 17					100 9 5
02 50	25 1 1	25 1 3					100 4 2
03 43	29 2 2	14 1 17	14 1 3				100 7 4
05 15	74 20 19	4 1 17	4 1 3	4 1 14	- 1		100 27 14
06	67 4 4	33 2 6					100 6 3
10	80 4 4	20 1 3					100 5 3
12 7	79 11 10	14 2 33					100 14 7
14 25	50 6 6	25 3 9					100 12 6
15	20 1 1	80 4 12					100 5 3
16 64	29 4 4	7 1 3					100 14 7
22 7	80 12 11	7 1 17		7 1 14	- 1		100 15 8
25 64	32 7 7	5 1 3			- 1		100 22 11
26	100 5 5						100 5 3
30 4	41 11 10	56 15 44			- 1		100 27 14
31	100 7 7						100 7 4
34 27	36 4 4	9 1 3		27 3 43	1		100 11 8
36		60 3 9	40 2 29				100 5 3
RD OF	2	- 2	- 1	- 1			- 3
TOTAL 21	55 41 100	3 107 100	17 6 100	4 34 100	7 100		100 195 100

17-999 Over Six Man-Months: FIELD OF TASK vs. KIND OF TASK

12-14	A	B	C	D	E	RD OF	TOTAL
01			100	1 50			100 1 3
02 100	1 6						100 1 3
03 75	3 17			25 1 50			100 4 12
05 60	60 2 11	3 33					100 5 15
10		100	1 50				100 1 3
12	100 1 11						100 1 3
14 50	50 2 11	2 22					100 4 12
15		100	1 50				100 1 3
16 83	5 28			17 1 50			100 6 18
22	50 1 11		50 1 50				100 2 6
25 100	4 22						100 4 12
30	100 2 22						100 2 6
34 100	1 6						100 1 3
RD OF	- 1	1					1
TOTAL 55	27 18 100	6 9 100	6 2 100	6 2 100	2 100		100 33 100

These four tables show how a change in level of effort of tasks affects the kind of task and the media used to obtain the chunks of information. As a composite, these tables indicate that: (1) as research tasks increase in effort, there is an increased use of texts and demonstration-experimentation, and a decreased use of previous knowledge to obtain information chunks; (2) engineering tasks show little or no change in the use of media as the level of effort of the task changes; (3) as R&D support-type tasks increase in effort, there is a slight decrease in the use of texts and previous knowledge to obtain information chunks.

17-005 One Man-Week or Under: KIND OF TASK vs. MEDIA

14-28	A	B	C	D	K	N	P	R	S	T	V	W	Z	RD DF	TOTAL
A	5 13 10	23 66 17	5 15 25	7 21 17	5 14 15		19 55 63	9 27 13	17 48 38	1 11	7 19 25	1 3 18	1 4 67	1	100 286 21
B	13 94 70	29 210 53	5 34 57	8 59 49	7 51 53	1 10 77	3 24 28	18 126 63	8 58 46	1 7 78	5 37 49	1 8 47	2 33	1	100 720 54
C	9 3 2	30 10 3	9 3 5	6 2 2	12 4 4			15 5 2		3 1 11	15 5 7			1	100 33 2
D	7 17 13	34 86 22	2 6 10	12 35 26	10 26 27	1 3 23	3 7 8	14 36 18	8 19 15		6 15 20	2 4 24		1	100 250 19
E	15 8 6	44 23 6	4 2 3	15 8 7	2 1 1		2 1 1	13 7 3				4 2 12		1	100 52 4
RD DF	- 1	- 1		- 1				1	1		- 1	- 1			
TOTAL	10 135 100	29 395 100	4 60 100	9 121 100	7 96 100	1 13 100	6 87 100	15 201 100	9 125 100	1 9 100	6 76 100	1 17 100	6 100	2	100 1341 100

17-022 One Man-Month or Under: KIND OF TASK vs. MEDIA

14-28	A	B	C	D	K	N	P	R	S	T	V	W	RD DF	TOTAL
A		29 37 60	2 2 50	2 3 60	6 8 57	1 1 33	26 33 83	11 14 38	16 20 69		8 10 71		- 1	100 128 58
B	9 5 71	37 20 32		4 2 40	7 4 29	4 2 67	2 1 3	31 17 46	4 2 7		2 1 7			100 54 24
C	7 1 14	21 3 5					29 4 10	14 2 5	29 4 14					100 14 6
D								10 1 3	10 1 3		30 3 21	50 5 100		100 10 5
E	7 1 14	13 2 3	13 2 50		13 2 14		13 2 5	20 3 8	13 2 7	- 1 100			1	100 15 7
RD DF	1						- 1				1	•		
TOTAL	3 7 100	28 62 100	2 4 100	2 5 100	6 14 100	1 3 100	18 40 100	17 37 100	13 29 100	1 100	6 14 100	2 5 100	2	100 221 100

17-132 Six Man-Months or Under: KIND OF TASK vs. MEDIA

14-28	A	B	C	D	K	N	P	R	S	T	V	W	Z	RD DF	TOTAL
A	6	24	1	6	4		15	13	10	2	19	1		- 1	100
	17	64	2	16	12	1	40	34	26	5	52	2	1		272
	4	6	2	6	4	8	38	6	19	14	10	6	5		8
B	15	28	4	6	9		2	18	4	1	14	1		- 2	100
	273	512	65	110	160	8	32	324	65	14	264	11	8		1846
	59	51	59	43	52	62	31	55	48	39	50	35	36		51
C	11	28	4	8	13		1	10	5	1	19		1	- 1	100
	20	53	8	15	24		2	19	9	2	35		1		188
	4	5	7	6	8		2	3	7	6	7		5		5
D	12	29	3	10	9		2	16	2	1	14	1	1		100
	139	327	35	110	97	2	23	186	28	13	155	15	10		1140
	30	33	32	43	31	15	22	31	21	36	29	48	45		32
E	8	28		5	10	1	5	20	5	1	13	2	1	1	100
	13	44		7	16	2	7	31	8	2	20	3	2		155
	3	4		3	5	15	7	5	6	6	4	10	9		4
RD DF		1		- 1					- 1	- 1		1			
TOTAL	13	28	3	7	9		3	16	4	1	15	1	1	- 1	100
	462	1000	110	258	309	13	104	594	136	36	526	31	22		3601
	100	100	100	100	100	100	100	100	100	100	100	100	100		100

17-999 Over Six Man Months: KIND OF TASK vs. MEDIA

14-28	A	B	C	D	K	N	P	R	S	T	V	W	Z	RD DF	TOTAL
A	5	23	1	10	3		21	14	13		6	2	1	1	100
	16	79	5	34	10		73	48	44		22	6	3		340
	6	10	6	17	5		49	11	28		10	21	17		13
B	12	33	3	6	8	1	3	19	5	1	9	1	1	- 2	100
	153	423	44	78	98	7	38	244	61	8	112	7	11		1284
	57	52	51	40	46	88	26	53	39	57	52	24	61		49
C	10	31	3	7	16	1	7	14	5	1	2	2		1	100
	14	46	5	11	23	1	11	21	8	1	3	3			147
	5	6	6	6	11	13	7	5	5	7	1	10			6
D	11	33	4	9	10		2	16	4		8	1	1	1	100
	76	237	30	63	73		18	115	32	3	60	10	4		721
	28	29	35	32	34		12	25	21	21	28	34	22		27
E	7	25	1	7	8		6	21	8	1	13	2		1	100
	9	34	2	9	11		8	29	11	2	17	3			135
	3	4	2	5	5		5	6	7	14	8	10			5
RD DF	1	- 1			- 1	- 1	1			1	1	1			
TOTAL	10	31	3	7	8		6	17	6	1	8	1	1	1	100
	268	819	86	195	215	8	148	457	156	14	214	29	18		2627
	100	100	100	100	100	100	100	100	100	100	100	100	100		100

This series of seven tables shows the use of different information chunks and their respective fields relative to the field of the task. They illustrate the primary need for information within the field of the task while interdisciplinary information is required to a somewhat lesser extent for all classes of information.

25A Concepts FIELD OF TASK vs. FIELD OF CHUNK

12-26	01	02	03	05	06	10	11	12	14	15	16	22	25	26	3
01	33 5 100		7 1 4	7 1 1		7 1 25				7 1 4			27 4 4		7
02	5 5 42												50 5 5		
03		68 13 57	5 1 1							5 1 4	5 1 7		11 2 2		
05			79 42 63	2 1 17							2 1 7		6 3 3	2 1 14	8
06	17 2 17		8 1 1	25 3 50				17 2 13		17 2 7			8 1 1		
10		20 1 4			40 2 50							20 1 10	20 1 1		
11						100 3 75									
12	3 1 8		19 6 9		3 1 25			34 11 69	3 1 8				31 10 11		6
14		18 2 9							64 7 56	9 1 4					
15										100 9 32					
16		5 1 4								5 1 4	52 11 73		14 3 3		10
22		5 1 4	5 1 1						10 2 17			38 8 80	10 2 2	10 2 29	14
25	2 1 8	2 1 4											91 39 42		5
26		11 1 4							11 1 8	22 2 7	11 1 7			44 4 57	
30	3 2 17		21 14 21	3 2 33				4 3 19	1 1 8	10 7 25		1 1 20	16 11 12		33 2
31										25 2 7			13 1 1		13
34		7 2 9				3 1 25							31 9 19		10
36	4 1 8		8 1 1							17 2 7	8 1 7		17 2 2		
AD OF		1	2					- 1	1	- 1	- 1		1		
TOTAL	1 5 100	5 12 100	6 23 100	18 57 100	2 6 100	1 4 100	1 4 100	4 16 100	3 12 100	7 28 100	4 15 100	3 10 100	25 93 100	2 7 100	11

TASK vs. FIELD OF CHUNK

ent information chunks and their respective fields relative to the field of the task, ithin the field of the task while interdisciplinary information is required to a tion.

FIELD OF CHUNK

06	10	11	12	14	15	16	22	25	26	30	31	34	36	RD OF	TOTAL
	7 1 25				7 1 4			27 4 4		7 1 3		7 1 4		- 2	100 15 4
								50 5 5							100 10 3
					5 1 4	5 1 7		11 2 2					5 1 13	1	100 19 5
2 1 17						2 1 7		6 3 3	2 1 14	8 4 10			2 1 13	- 1	100 53 14
25 3 50			17 2 13		17 2 7			8 1 1			8 1 20				100 12 3
	40 2 50						20 1 10	20 1 1							100 5 1
		100 3 75													100 3 1
	3 1 25		34 11 69	3 1 8				31 10 11		6 2 5				1	100 32 8
				64 7 58	9 1 4							9 1 4			100 11 3
					100 9 32										100 9 2
					5 1 4	34 11 73		14 3 3		10 2 5		14 3 13			100 21 6
				10 2 17			38 8 80	10 2 2	10 2 29	14 3 8		10 2 8		- 2	100 21 6
								91 39 42		5 2 5					100 43 11
				11 1 8	22 2 7	11 1 7			44 4 57					1	100 9 2
3 2 33			4 3 19	1 1 8	10 7 25		1 1 10	16 11 12		33 22 55	1 1 20	3 2 8	1 1 13	3	100 67 18
					25 2 7			13 1 1		13 1 3	38 3 60	13 1 4		- 2	100 8 2
	3 1 25							31 9 10		10 3 8		45 13 54	3 1 13	1	100 29 8
					17 2 7	8 1 7		17 2 2				8 1 4	33 4 50	1	100 12 3
			- 1	1	- 1	- 1		1		- 2		1	- 2		
2 1 6 100	1 4 100	1 4 100	4 16 100	3 12 100	7 28 100	4 15 100	3 10 100	25 93 100	2 7 100	11 40 100	1 5 100	6 24 100	2 8 100		100 379 100

25B Cost and Funding: FIELD OF TASK vs. F .D OF CHUNK

Tasks in a given field use cost and funding information almost exclusively from the same field as the task.

12-26	01	02	03	05	06	10	11	12	14	16	27	25	26	30	31
01	77 10 91					8 1 33					8 1 20				
02		67 2 100											33 1 5		
03			100 3 100												
05				89 16 73									11 2 11		
06				25 2 9	63 5 100								13 1 5		
10						50 2 67								50 2 6	
11							50 1 33								
12				8 1 5				54 7 88					8 1 5	15 2 6	8 1 33
14									67 6 75				22 2 11		11 1 33
16						50 1 33				50 1 100					
22				14 1 5					14 1 13		57 4 80		14 1 5		
25				20 1 5								40 2 100		20 1 3	
26													100 5 26		
30								4 1 13					4 1 5	89 25 78	
31				20 1 5									60 3 16		20 1 31
34									8 1 13				15 2 11		
36	20 1 9					20 1 33								40 2 6	
RD DF				- 2			1	- 1	- 1					1	
TOTAL	8 11 100	1 2 100	2 3 100	15 22 100	3 5 100	2 3 100	2 3 100	6 8 100	6 8 100	1 1 100	3 5 100	1 2 100	13 19 100	22 32 100	2 3 100

ELD OF TASK vs. FIELD OF CHUNK

ng information almost exclusively from the same field as the task.

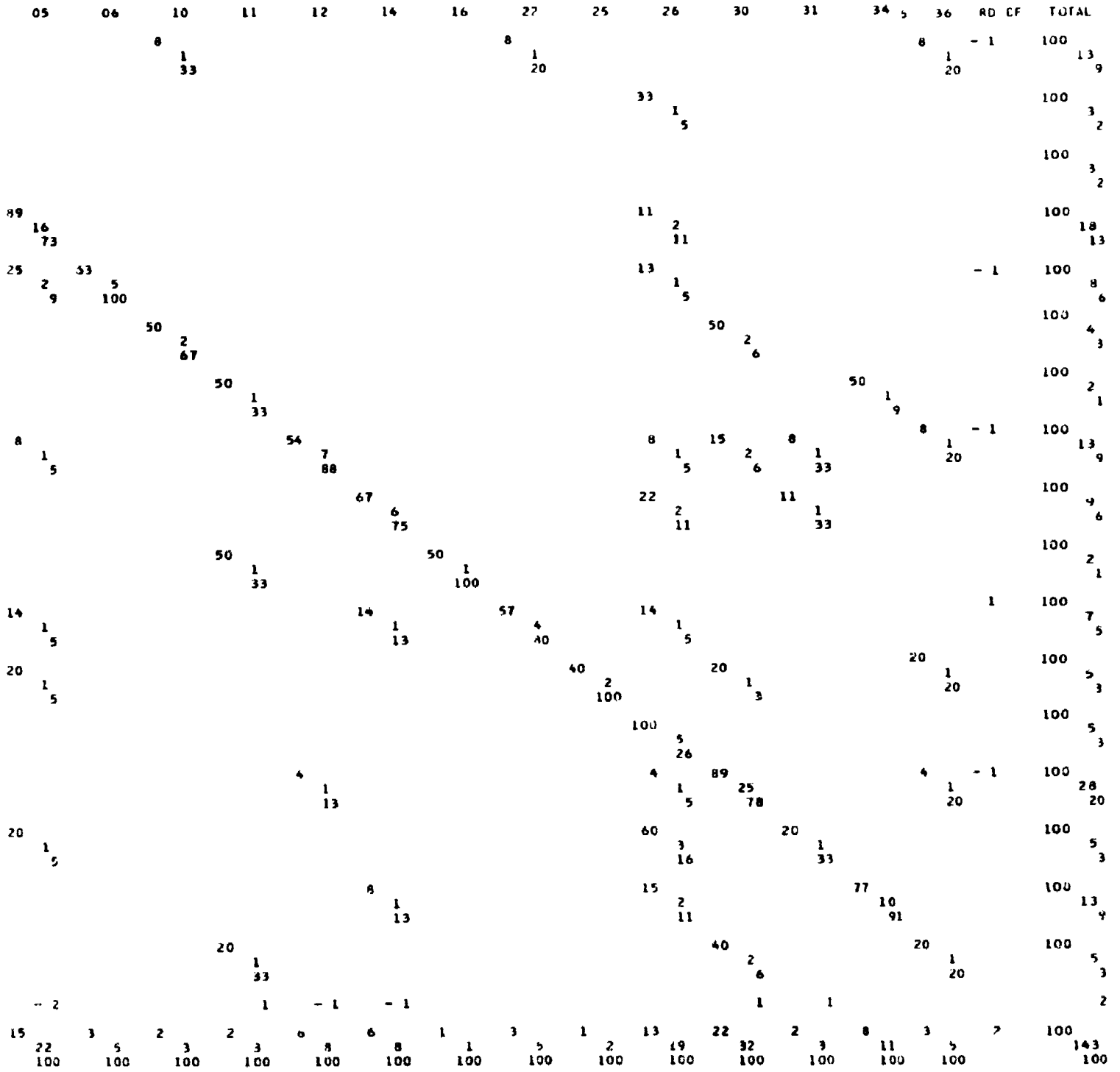

25C How-to-do-it FIELD OF TASK vs. FIELD OF CHUNK

Tasks in a given field use how-to-do-it information to a large extent in the same field as the task.

12-26	01	02	03	05	06	10	11	12	14	15	16	22	25	26	30
01	68 25 69							3 1 3	8 3 7				5 2 5	5 2 5	11 4 1
02		25 3 100		6 1 1						8 1 8					42 5 2
03			73 24 69						3 1 2			3 1 2			18 6 2
05	1 1 3			73 131 82	2 4 18			1 1 3	2 3 7	1 1 8		1 2 3	1 1 2	2 3 8	15 26 9
06				15 4 3	58 15 68									4 1 3	15 4 1
10			11 5 14	4 2 1		52 24 86		2 1 3	2 1 2			4 2 3	2 1 2	2 1 3	13 6 2
11	13 1 3						88 7 88								
12	2 1 3			2 1 1				60 25 74	2 1 2					5 2 5	14 6 2
14									54 26 62				2 1 2	6 3 8	35 17 6
15										25 3 25					67 8 3
16	1 1 3		4 3 9	1 1 1					1 1 2		58 39 95		1 1 2	1 1 3	28 19 1
22	1 1 3			1 1 1	2 2 7			1 1 3	3 3 7	1 1 8		63 54 87	1 1 2	3 3 8	19 16 6
25	1 1 3		1 1 3	6 4 3	3 2 9	1 1 4		1 1 3	3 2 5				36 25 60		40 28 10
26												5 1 2		76 16 43	10 2 1
30	3 4 11		1 1 3	8 12 9	1 1 5	1 1 4		2 3 9		3 4 33			3 5 12		74 108 39
31				4 1 1								4 1 2			19 5 2
34				4 2 1			2 1 13	2 1 3			2 1 2	2 1 2	8 4 10	9 5 14	19 10 4
36	4 1 3		4 1 3						4 1 2	7 2 17	4 1 2		4 1 2		15 4
RD OF	- 1		- 1	- 3		- 1	- 1	- 1	2	1	1	- 1	1		
TOTAL	4 36 100	3 100	4 35 100	17 160 100	2 22 100	3 28 100	1 8 100	4 34 100	4 42 100	1 12 100	4 41 100	7 62 100	4 42 100	4 37 100	29 274 100

on to a large extent in the same field as the task.

	06	10	11	12	14	15	16	22	25	26	30	31	34	36	RD DF	TOTAL
				3 1 3	8 3 7				5 2 5	5 2 5	11 4 1					100 37 4
						8 1 8					42 5 2		17 2 4			100 12 1
					3 1 2			3 1 2			18 6 2			3 1 4		100 33 4
	2 4 18			1 1 3	2 3 7	1 1 8		1 2 3	1 1 2	2 3 8	15 26 9		3 5 9	1 1 4	- 3	100 179 19
	58 15 68									4 1 3	15 4 1		4 1 2	4 1 4		100 26 3
		52 24 86		2 1 3	2 1 2			4 2 3	2 1 2	2 1 3	13 6 2		4 2 4	2 1 4	2	100 46 5
			88 7 88												- 1	100 8 1
				60 25 74	2 1 2					5 2 5	14 6 2		7 3 6	7 3 11	1	100 42 4
					54 26 62				2 1 2	6 3 8	35 17 6		2 1 2		1	100 48 5
						25 3 25					67 8 3			8 1 4		100 12 1
					4 1 2		58 39 95		1 1 2	1 1 3	28 19 7		1 1 2		4	100 67 7
		2 2 7		1 1 3	3 3 7	1 1 8		63 54 87	1 1 2	3 3 8	19 16 6	1 1 5	2 2 4		2	100 86 9
	3 2 9	1 1 4		1 1 3	3 2 5			36 25 60			40 28 10	1 1 5	3 2 4	3 2 7	1	100 70 7
								5 1 2		76 16 43	10 2 1		10 2 4		- 1	100 21 2
	1 1 5	1 1 4		2 3 9		3 4 33			3 5 12		74 108 39	2 3 14	1 2 4	1 2 7		100 146 16
								4 1 2			19 5 2	63 17 77	4 1 2	7 2 7	- 1	100 27 3
			7 1 13	2 1 3			2 1 2	2 1 2	8 4 10	9 5 14	19 10 4		53 28 52		- 1	100 53 6
					6 1 2	7 2 17	4 1 2		4 1 2		15 4 1		7 2 4	52 14 50	- 1	100 27 3
		- 1	- 1	- 1	2	1	1	- 1	1		2	- 1	- 3	- 2		
	2 22 100	3 28 100	1 8 100	4 34 100	4 42 100	1 12 100	4 41 100	7 62 100	4 42 100	4 37 100	29 274 100	2 22 100	6 54 100	3 28 100	1	100 940 100

25E Math and Formula: FIELD OF TASK vs. FIELD OF CHUNK

Tasks that use math and formula information were found to be about evenly divided between the particular field and the field of mathematics.

12-26	01	02	03	05	06	10	12	14	15	16	22	25	26	30
01	8 1 33			8 1 5			8 1 14		50 6 5			17 2 5		8 1 7
02		10 1 50							50 5 4			20 2 5		10 1 7
03			63 5 71						25 2 2			13 1 2		
05				45 15 79	3 1 25				39 13 10			9 3 7		
06		20 1 50			40 2 50				40 2 2					
10						25 1 33			25 1 1			50 2 5		
12	4 1 33				4 1 25		25 6 86		42 10 8		8 2 17	8 2 5		8 2 14
14								71 5 83	14 1 1					14 1 7
15						5 1 33			95 21 16					
16									38 3 2	63 5 100				
22	3 1 33							3 1 17	52 16 12		29 9 75	10 3 7	3 1 33	
25									32 7 5			64 14 33		5 1 7
26									33 1 1				67 2 67	
30			2 1 14	7 3 16					54 25 19		2 1 8	15 7 17		17 8 57
31									33 1 1			67 2 5		
34						4 1 33			54 13 10			17 4 10		4
36			14 1 14						71 5 4					
RD DF	1		1			1			- 3			- 1		1
TOTAL	1 3 100	1 2 100	3 7 100	7 19 100	1 4 100	1 3 100	3 7 100	2 6 100	49 132 100	2 5 100	4 12 100	16 42 100	1 3 100	5 14 100

FIELD OF TASK vs. FIELD OF CHUNK

ormation were found to be about evenly divided between the particular field and the field of

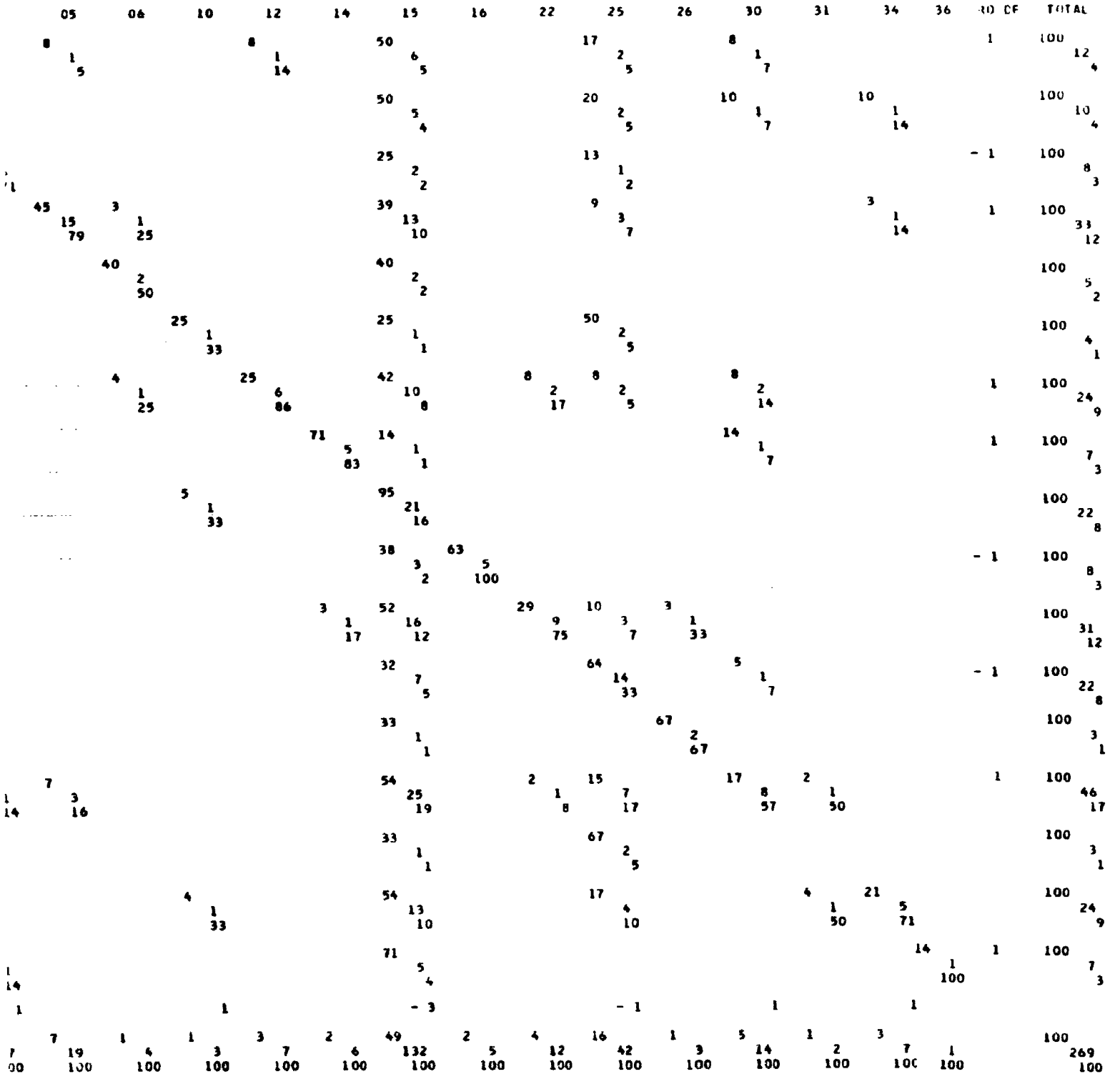

25F Specifications and Performance Characteristics FIELD OF TASK vs. FIELD OF CHUNK

Tasks in a given field use specifications and performance characteristics information primarily from the same field as the task.

12-26	01	02	03	05	06	10	11	12	14	15	16	22	25	26	30
01	70 89 68	1 1 3	2 3 4	3 4 1	1 1 1			2 3 2	5 7 5			2 2 1	2 2 3		6 8 3
02		60 18 60	7 2 3	3 1						3 1 14					17 5 2
03			68 32 45						11 5 3		9 4 5	2 1 1			6 3 1
05	1 3 2	1 2 7	1 1	80 240 69	2 7 9			1 1	3 8 5	1 14		1 1	1 1	1 2 5	6 18 6
06	5 5 4	3 3 10		17 18 5	58 60 70			3 3 2	3 3 2			1 1 1	2 2 3	1 1 2	4 4 1
10			7 5 7			67 51 76		8 4	3 2 1	1 1 1	3 2 1			1 1 2	7 5 2
11						8 1 1	67 6 67								
12	4 8 6		1 2 3	4 7 2	2 3 3	2 3 4		66 120 77	4 7 5			1 2 1	2 3 4	1 2 5	4 7 2
14	4 3 2		1 1 1					1 1 1	91 58 38		1 1 1	1 1 1		1 1 2	6 4 1
15				6 1	6 1 1	12 2 3		6 1 1		6 1 14		6 1 1	6 1 1		29 5 2
16	1 1 1		10 11 15	1 1	1 1 1				5 5 3		57 62 85	3 3 2	4 4 6	1 1 2	10 11 4
22	4 7 5		1 2 3	6 11 3	2 4 6			3 5 3	10 19 12	1 1 14		59 111 76	1 2 3	4 8 18	6 11 4
25	1 1 1	1 1 3	5 4 6	5 4 1	2 2 2	1 1 8		3 3 2	8 7 5	1 1 14			54 47 66	1 1 2	5 4 1
26			2 1 1		2 1 1				18 8 5		4 2 3	4 2 1		49 22 50	13 6 2
30	2 5 4	1 2 7	1 3 4	16 52 15	3 9 10	1 4 6	1 3 25	3 9 6	4 14 9	1 2 29	1 1	3 9 6	2 5 7	1 2 5	57 181 62
31				4 2 1								8 4 3	2 1 1		13 7 2
34	3 5 4	1 1 3	1 2 3	4 6 2		1 2 3		1 2 1	6 9 6			2 3 2	2 3 4	2 3 7	5 7 2
36	7 4 3	4 2 7	4 2 3	2 1	2 1 1			4 2 1	2 1 1		4 2 3	6 3 2			9 5 2
RD DF			1	1	2	1		- 1		1	1		1		1
TOTAL	7 131 100	2 30 100	4 71 100	18 348 100	4 86 100	3 67 100	1 12 100	8 156 100	8 153 100	1 7 100	4 73 100	7 146 100	4 71 100	2 44 100	15 291 100

Characteristics - FIELD OF TASK vs. FIELD OF CHUNK

rmance characteristics information primarily from the same field as the task

06	10	11	12	14	15	16	22	25	26	30	31	34	36	RD OF	TOTAL
1 1 1			2 3 2	5 7 5			2 2 1	2 2 3		6 8 3		4 5 3	2 3 4		100 128 7
				3 1 14						17 5 2		10 3 2			100 30 2
				11 5 3	9 4 5		2 1 1			6 3 1		2 1 1	2 1 1		100 47 2
2 7 8				3 8 5	1 14			1 1 1	1 2 5	6 18 6		4 13 8	1 1	2	100 299 15
58 60 70			3 3 2	3 3 2			1 1 1	2 2 3	1 1 2	4 4 1		1 1 1	3 3 4	- 1	100 104 5
67 51 76			8 4	3 2 1		1 1 1	3 2 1		1 1 2	7 5 2		4 3 2		- 1	100 76 4
8 1 1	67 8 67											17 2 1	8 1 1		100 12 1
2 3 3	2 3 4		66 120 77	4 7 5			1 2 1	2 3 4	1 2 5	4 7 2	2 3 7	4 7 4	5 9 11	- 2	100 183 9
			1 1 1	81 58 38		1 1 1	1 1 1		1 1 2	6 4 1		3 2 1		1	100 72 4
6 1 1	12 2 3		6 1 1		6 1 14		6 1 1	6 1 1		29 5 2			24 4 5	- 1	100 17 1
1 1 1				5 5 3		57 62 85	3 3 2	4 4 6	1 1 2	10 11 4		4 4 3	4 4 5	- 1	100 108 5
	2 4 6		3 5 3	10 19 12	1 1 14		59 111 76	1 2 3	4 8 18	6 11 4	1 1 2	2 3 2	2 3 4	- 2	100 188 10
2 2 2		1 1 8	3 3 2	8 7 5	1 1 14			54 47 66	1 1 2	5 4 1	3 3 7	5 4 3	5 4 5		100 87 4
2 1 1				18 8 5	4 2 3	4 2 1		49 22 50	13 6 2			7 3 2		1	100 45 2
3 9 10	1 4 6	1 3 25	3 9 6	4 14 9	1 2 29	1 1	3 9 6	2 5 7	1 2 5	57 181 62	1 4 9	2 5 3	2 7 9	- 1	100 317 16
							8 4 3	2 1 1		13 7 2	63 33 73	4 2 1	6 3 4		100 52 3
	1 2 3		1 2 1	6 9 6			2 3 2	2 3 4	2 3 7	5 7 2		66 97 62	5 8 10	1	100 148 8
2 1 1			4 2 1	2 1 1	4 2 3	6 3 2				9 5 2	2 1 2	4 2 1	52 28 35	- 2	100 54 3
2	1		- 1		1	1		1		1			1		- 1
4 86 100	3 67 100	1 12 100	9 156 100	8 153 100	1 1 100	4 73 100	7 146 100	4 71 100	2 44 100	15 291 100	2 45 100	8 157 100	4 79 100	- 1	100 1967 100

25H Raw Data: FIELD OF TASK vs. FIELD OF CHUNK

Tasks in a given field use raw data information primarily from the same field as the task

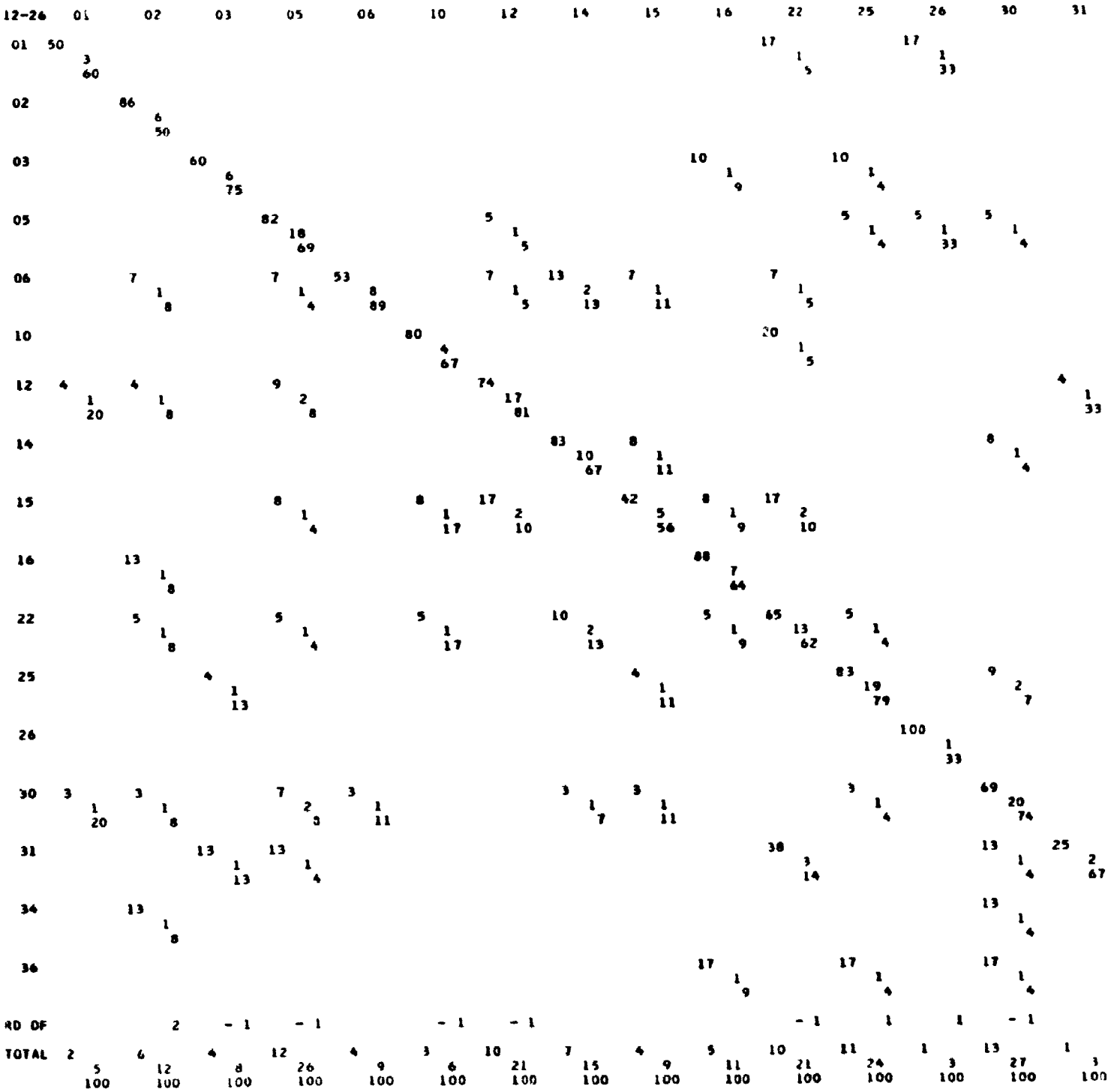

OF TASK vs. FIELD OF CHUNK

nformation primarily from the same field as the task

	05	06	10	12	14	15	16	22	25	26	30	31	34	36	RD OF	TOTAL
								17 1 5		17 1 33				17 1 17	- 1	100 6 3
													14 1 11			100 7 3
							10 1 9		10 1 4					20 2 33		100 10 5
	82 18 69			5 1 5					5 1 4	5 1 33	5 1 4				- 2	100 22 10
	7 1 4	53 8 89		7 1 5	13 2 13	7 1 11		7 1 5							- 1	100 15 7
			80 4 67					20 1 5								100 5 2
	9 2 8			74 17 81								4 1 33	4 1 11		1	100 23 11
					83 10 67	8 1 11					8 1 4				1	100 12 6
	8 1 4		8 1 17	17 2 10		42 5 56	8 1 9	17 2 10								100 12 6
							88 7 64								- 1	100 8 4
	5 1 4		5 1 17		10 2 13		5 1 9	65 13 62	5 1 4							100 20 9
						4 1 11			83 19 79		9 2 7					100 23 11
										100 1 33						100 1
	7 2 8	3 1 11			3 1 7	3 1 11			3 1 4		69 20 74			3 1 17	3	100 29 13
	13 1 4							38 3 14			13 1 4	25 2 67			- 2	100 8 4
											13 1 4		75 6 67		- 1	100 8 4
							17 1 9		17 1 4		17 1 4		17 1 11	33 2 33	- 1	100 6 3
	- 1		- 1	- 1				- 1	1	1	- 1					- 1
	12 26 100	4 9 100	3 6 100	10 21 100	7 15 100	4 9 100	5 11 100	10 21 100	11 24 100	1 3 100	13 27 100	1 3 100	4 9 100	3 6 100		100 215 100

25J Technical Status FIELD OF TASK vs. FIELD OF CHUNK

Tasks in a given field use technical status information primarily from the same field as the task.

12-26	01	02	03	05	06	10	11	12	14	15	16	22	25	26	30
01	79 26 87			3 1 1		6 2 12			3 1 4			3 1 3			3 1 1
02		62 8 89											15 2 5		15 2 3
03			70 14 64	5 1 1					10 2 8						5 1 1
05				88 74 80	1 1 4			1 1 4	1 1 4			1 1 3	1 1 2	1 1 5	4 3 4
06	3 1 3			17 5 5	70 21 75									3 1 5	7 2 3
10						88 14 82		6 1 4				6 1 3			
11							100 3 60								
12				7 2 2	11 3 11			56 15 63	7 2 8					4 1 5	
14	6 1 3		6 1 5						81 13 52						6 1 1
15										44 4 57			11 1 2		22 2 3
16	2 1 3		7 3 14	2 1 1							84 37 95		2 1 2	2 1 5	
22			5 2 9	3 1 1	3 1 4	3 1 6		3 1 4		3 1 14		67 26 79	3 1 2	3 1 5	10 4 6
25		3 1 11						3 1 4	5 2 8			3 1 3	79 30 73	3 1 5	5 2 3
26											11 2 5			84 16 73	5 1 1
30				9 7 8	1 1 4		3 2 40	5 4 17	5 4 16	3 2 29		4 3 9	5 4 10		61 46 69
31															8
34			3 1 5		3 1 4										3 1 1
36	9 1 3		9 1 5	9 1 1				9 1 4					9 1 2		9 1 1
NO OF	1		- 2		- 2								2	- 3	3
TOTAL	6 30 100	2 9 100	4 22 100	18 93 100	5 28 00	3 17 100	1 3 100	5 24 100	5 25 100	1 7 100	8 33 100	6 33 100	8 41 100	4 22 100	13 67 100

06	10	11	12	14	15	16	22	25	26	30	31	34	36	RD OF	TOTAL

field journals are rarely used by the ordnance specialists and perform only a reference function. Handbooks and manuals are seldom used in the ordnance field to obtain specifications and performance information.

Z-A Concepts FIELD OF GROWTH vs. MEDIA

26-28	A	B	C	D	K	N	P	R	S	T	V	W	Z	RD DF	TOTAL
01		43		14					14		29				100
		3		1					1		7				7
		2		3					1		1				1
02	4	13	4	22.			9	9	26		13				100
	1	3	1	5			2	2	6		3				23
	5	2	14	16			3	3	5		2				4
03		10		3		20		13	23		33			- 2	100
		4		1			8	5	9		13				40
		3		3			14	6	8		10				6
05	2	25		7	3	5		11	20		28			- 1	100
	2	25		7	3		5	11	20		29				102
	11	17		22	11		8	14	17		21				16
06		9	9			9		27	18		27			1	100
		1	1				1	3	2		3				11
		1	14				2	4	2		2				2
10		33			17			17	17		17			- 1	100
		2			1			1	1		1				6
		1			4			1	1		1				1
11					20			20			60				100
					1			1			3				5
					4			1			2				1
12	4	46	4		7			21	11		7				100
	4	13	1		2			6	3		2				28
	5	9	14		7			8	3		1				4
14	5	16		5	11	5		21	11		21		5		100
	1	3		1	2		1	4	2		4		1		19
	5	2		3	7		2	5	2		3		50		3
15		22		4	6	10		14	29		12		2	1	100
		11		2	3	5		7	14		6		1		49
		7		6	11	8		9	12		4		50		8
16	4	19	4		4	23		12	12		23			- 1	100
	1	5	1		1	6		3	3		6				26
	5	3	14		4	10		4	3		4				4
22	24	18	6	12	6	6		18			12			- 2	100
	4	3	1	2	1	1		3			2				17
	21	2	14	6	4	100		4			1				3
25	1	23	1	2	6	11	13	27			16	1		- 1	100
	1	38	2	3	9	18	21	43			26	1			162
	5	26	29	9	33	31	27	36			19	33			25
26	6	19		19	6	13	19	13			o			- 1	100
	1	3		3	1	2	3	2			1				16
	5	2		9	4	3	4	2			1				3
30	5	28		10		3	7	10	3	31	3				100
	3	17		6		2	4	6	2	19	2				61
	16	11		19		3	5	5	50	14	67				10
31		38			13			13	25		13			- 2	100
		3			1			1	2		1				8
		2			4			1	2		1				1
34	3	21		3		18		5	13	3	34				100
	1	8		1		7		2	5	1	13				38
	5	5		3		12		3	4	25	10				6
36	17	33			11	11		6	6	6	11			- 1	100
	3	6			2	2		1	1	1	2				18
	16	4			7	3		1	1	25	1				3
RD DF	1	1	1	1			1		- 4		2				- 1
TOTAL	3	23	1	5	4	9		12	19	1	21			2	100
	19	148	7	32	27	1		59	78	120	4	136	3	2	636
	100	100	100	100	100	100		100	100	100	100	100	100	100	100

A

26-28	A	B	D	K	P	R	V	W	Z	RD DF	TOTAL
01	5 1 5	32 6 7		16 3 8	5 1 100	37 7 20	5 1 6				100 19 9
02							100 2 12				100 2 1
03	33 1 5					67 2 6					100 3 1
05	19 6 32	39 12 14		16 5 14			10 3 18	3 1 50	13 4 57		100 31 15
06	17 1 5	67 4 5	17 1 13							- 1	100 6 3
10		67 2 2				33 1 3					100 3 1
11		100 4 5									100 4 2
12	8 1 5	54 7 8		23 3 8		8 1 3	8 1 6			- 1	100 13 6
14	25 3 16	33 4 5		25 3 8		8 1 3	8 1 6			1	100 12 6
16						100 1 3					100 1
22		50 3 3		17 1 3		33 2 6					100 6 3
25	50 1 5						50 1 6				100 2 1
26	8 2 11	38 9 10		17 4 11		21 5 14	8 2 12	4 1 50	4 1 14		100 24 11
30	5 3 16	42 25 29	8 5 63	20 12 32		15 9 26	7 4 24		2 1 14	1	100 59 28
31		43 3 3		29 2 5		29 2 6				- 1	100 7 3
34		38 6 7	6 1 13	19 3 8		19 3 9	13 2 12		6 1 14	- 1	100 16 8
36		40 2 2	20 1 13	20 1 3		20 1 3					100 5 2
RD DF			- 2			- 2	- 2		1		
TOTAL	9 19 100	41 87 100	4 8 100	17 37 100	1 100	16 35 100	8 17 100	1 2 100	3 7 100	1	100 213 100

26-28	A	B	C	D	K	N	P	J	S	T	V	M	Z	RD DF	TOTAL
01	13	34	6	10	11			21	1		3		1		100
	9	24	4	7	8			15	1		2		1		71
	6	5	7	5	7			7	1		1		10		5
02		80			20										100
		4			1										5
		1			1										
03	5	31	2	4			9	16	9		24				100
	3	17	1	2			5	9	5		13				55
	2	4	2	1			7	4	7		6				4
05	16	32	4	9	4		5	10	6	1	11		1	1	100
	40	78	11	22	9	1	12	25	16	2	28	1	2		247
	25	16	20	15	8	20	16	12	24	25	14	20	20		16
06	9	26		23			3	23		3	14			- 1	100
	3	9		8			1	8		1	5				35
	2	2		6			1	4		13	2				2
10	9	32	2	7	5		2	25	5		14			- 1	100
	4	14	1	3	2		1	11	2		6				44
	2	3	2	2	2		1	5	3		3				3
11		8		17	8			17			50				100
		1		2	1			2			6				12
				1	1			1			3				1
12	6	31	4	6	15			19		2	17		2	- 2	100
	3	17	2	3	8			10		1	9		1		54
	2	4	4	2	7			5		13	4		10		4
14	11	32	6	5	9	2	9	18	4		4		1	- 1	100
	9	26	5	4	7	2	7	15	3		3		1		82
	6	5	9	3	6	40	9	7	4		1		10		5
15	4	35		4	13			17	22				4	1	100
	1	8		1	3			4	5				1		23
	1	2		1	3			2	7				10		1
16		33		3	10	1	24	7	13		9				100
		23		2	7	1	17	5	9		6				70
		5		1	6	20	23	2	13		3				5
22	10	40	5	10	4			19		1	12			- 1	100
	10	42	5	10	4			20		1	12				104
	6	9	9	7	4			10		13	6				7
25	10	30		4	10		16	14	7		7		1	1	100
	7	21		3	7		11	10	5		5		1		70
	4	4		2	6		15	5	7		2		10		5
26	17	30	2	2	21		3	11	2	2	11			- 1	100
	11	19	1	1	13		2	7	1	1	7				63
	7	4	2	1	12		3	3	1	13	3				4
30	8	29	3	14	6		3	10	5		20	1		1	100
	34	124	14	60	25	1	14	45	20	1	86	4	1		429
	21	26	26	41	23	20	19	22	29	13	42	80	10		28
31	20	17		13	10			23			17				100
	6	5		4	3			7			5				30
	4	1		3	3			3			2				2
34	20	33	4	8	3		4	11			13		2	2	100
	18	30	4	7	3		4	10			12		2		90
	11	6	7	5	3		5	5			6		20		6
36	7	34	11	11	18		2	11	2	2	4			- 2	100
	4	19	6	6	10		1	6	1	1	2				56
	2	4	11	4	9		1	3	1	13	1				4
RD DF	- 1	- 1	1		- 1				3	- 3	1				- 2
TOTAL	11	31	4	9	7		5	14	4	1	13		1		100
	162	481	54	145	111	5	75	209	68	8	207	5	10		1540
	100	100	100	100	100	100	100	100	100	100	100	100	100		100

26-28	A	B	C	D	K	N	P	R	S	V	X	Z	RD OF	TOTAL
01	25 1 7			25 1 2			25 1 6		25 1 1					100 4 1
02		33 1 2			33 1 7				33 1 1				1	100 3 1
03		18 2 3				9 1 25	9 1 6	9 1 2	55 6 6					100 11 3
05	8 2 14	8 2 3		12 3 5			8 2 11	12 3 7	31 8 8	23 6 12			- 2	100 26 7
06								50 3 7	50 3 3					100 6 2
10		20 1 2		20 1 2	20 1 7		20 1 6				20 1 11			100 5 1
12		14 1 2		14 1 2	14 1 7			29 2 5		14 1 2	14 1 11		1	100 7 2
14		13 1 2		38 3 5	13 1 7				38 3 3				- 2	100 8 2
15	2 4 29	21 37 59		16 28 45	3 6 40	1 1 25	3 6 33	8 14 34	26 46 47	18 33 66	2 3 33	1 1 100	- 1	100 179 47
16	14 1 7	14 1 2		29 2 3			14 1 6	14 1 2	14 1 1				1	100 7 2
22	8 1 7	8 1 2	8 1 33	8 1 2	8 1 7	8 1 25		31 4 10		23 3 6			- 2	100 13 3
25	3 2 14	14 9 14	2 1 33	19 12 19	3 2 13		6 4 22	13 8 20	31 20 20	6 4 8	3 2 22			100 64 17
26	25 1 7			25 1 2					50 2 2					100 4 1
30	4 1 7	21 5 8	4 1 33	21 5 8		4 1 25	4 1 6	8 2 5	17 4 4	8 2 4	8 2 22		1	100 24 6
31	33 1 7			33 1 2					33 1 1				1	100 3 1
34		15 2 3		23 3 5	8 1 7		8 1 6	23 3 7	15 2 2	8 1 2				100 13 3
36					100 1 7									100 1
RD OF	1	- 2	1	- 2	- 2		- 2	1	1		1			1
TOTAL	4 14 100	17 63 100	1 3 100	16 62 100	4 15 100	1 4 100	5 18 100	11 41 100	26 98 100	13 50 100	2 9 100	1 100		100 378 100

[illegible] - [illegible] - TASK

This table shows that research tasks are principally performed by detailed scientific or engineering people. Tasks in engineering and R&D support involved a proportionally higher percentage of technical evaluation and technical administration people than did research tasks

9-14	A	B	C	D	E	RD DF	TOTAL
A	20	47	4	26	4	- 1	100
	160	366	31	201	28		786
	91	54	50	56	29		57
B	3	61	7	24	5		100
	13	242	27	96	21		399
	7	35	44	27	22		29
C	1	44	2	29	23	1	100
	2	70	3	46	37		158
	1	10	5	13	38		11
D	3	16	3	44	34		100
	1	5	1	14	11		32
	1	1	2	4	11		2
RD DF			- 1				1
TOTAL	13	50	5	26	7	- 1	100
	176	683	62	357	97		1375
	100	100	100	100	100		100

0925 - 1 - TYPE OF ACTIVITY vs. CLASS OF CHUNK

This table shows that detailed scientific and engineering people use relatively little cost and funding information. On the other hand, technical administration people use proportionally more cost and funding and technical status information.

9-25	A	B	C	E	F	H	J	M	RD DF	TOTAL
A	10	2	22	7	42	5	9	4	- 1	100
	265	42	604	198	1160	148	262	106		2785
	70	29	64	74	59	69	51	41		59
B	7	4	19	4	44	4	12	7	- 1	100
	96	57	257	58	603	51	160	100		1382
	25	40	27	22	31	24	31	39		29
C	3	9	14	1	41	3	18	10	1	100
	14	41	65	3	187	14	83	47		454
	4	29	7	1	10	7	16	18		10
D	6	5	21	15	26	3	18	6		100
	4	3	14	10	17	2	12	4		66
	1	2	1	4	1	1	2	2		1
RD DF			1	- 1	- 1	- 1				1
TOTAL	8	3	20	6	42	5	11	5		100
	379	143	940	269	1967	215	517	257		4687
	100	100	100	100	100	100	100	100		100

AUERBACH

0942 - 1 - TYPE OF ACTIVITY vs. FIRST SOURCE

This table shows that technical administrative people get very little information with the task assignment. These same people also use colleagues more as a first source of information and their own collections less.

9-42	A	B	E	F	H	I	K	L	RD DF	TOTAL
A	12	4	20	7	13	21	4	19		100
	321	122	556	196	349	592	117	532		2785
	65	46	54	81	57	72	50	54		59
B	10	8	23	2	14	12	7	23	1	100
	142	107	322	32	196	171	95	317		1382
	29	40	31	13	32	21	41	32		29
C	6	8	29	2	12	10	4	28	1	100
	26	37	133	11	56	46	18	127		454
	5	14	13	5	9	6	8	13		10
D	11	3	24	6	11	17	6	23	- 1	100
	7	2	16	4	7	11	4	15		66
	1	1	2	2	1	1	2	2		1
RD DF		- 1		- 1	1		- 1	- 1		1
TOTAL	11	6	22	5	13	17	5	21		100
	496	268	1027	243	608	820	234	991		4687
	100	100	100	100	100	100	100	100		100

0949 - 1 - TYPE OF ACTIVITY vs. WHETHER TAB IS SEEN OR READ

No outstanding features were observed from the data presented in this table.

9-49	A	B	D	RD DF	TOTAL
A	19	21	59	1	100
	152	167	467		786
	54	55	59		57
B	25	24	51		100
	101	96	202		399
	36	32	26		29
C	15	24	61		100
	24	38	96		158
	9	13	12		11
D	9	9	81	1	100
	3	3	26		32
	1	1	3		2
RD DF		- 1			1
TOTAL	20	22	58		100
	280	304	791		1375
	100	100	100		100

This table shows a slight tendency for technical evaluation people to use information centers relative to the rest of the population.

9-52	A	B	BLNK	RD DF	TOTAL
A	53	46	2	- 1	100
	414	359	13		786
	55	59	62		57
B	62	38	1	- 1	100
	246	151	2		399
	33	25	10		29
C	51	47	2		100
	81	74	3		158
	11	12	14		11
D	28	63	9		100
	9	20	3		32
	1	3	14		2
RD DF		1			1
TOTAL	55	44	2	- 1	100
	750	604	21		1375
	100	100	100		100

0950 - 2 - TYPE OF ACTIVITY vs. USE OF DDC

The chi-squared test was used on the data in this table to test the null hypothesis that there is no statistically significant relationship between a person's type of activity and whether or not he uses DDC. This calculation was made at the five percent confidence level and resulted in rejecting the null hypothesis. This table shows DDC is used by detailed scientific and engineering type people more so than by technical administrative people.

9-50	A	B	BLNK	RD DF	TOTAL
A	47	53			100
	373	413			786
	58	57			57
B	52	48			100
	206	192	1		399
	32	26	17		29
C	35	63	2		100
	55	100	3		158
	9	14	50		11
D	19	75	6		100
	6	24	2		32
	1	3	33		2
RD DF					1
TOTAL	47	53			100
	640	729	6		1375
	100	100	100		100

0994 - 1 - TYPE OF ACTIVITY vs. TASK OUTPUT

This comparison shows that detailed scientific or engineering people tend to be performing tasks of a design, experimental, math and computer nature. Technical administrative people tend to be performing tasks of an administrative or cost nature.

9-94	A	B	C	D	E	F	G	H	I	J	K	L	M	N	RD DF	TOTAL
A	4	3	21	7	9	20	2	4	5	4	4	1	3	12	1	100
	34	27	164	53	73	155	16	32	37	33	33	10	24	95		786
	74	20	78	84	78	65	73	94	54	52	50	43	32	41		57
B	2	15	11	1	3	16	2	1	5	5	6	3	5	26	- 1	100
	7	58	43	4	13	64	6	2	21	20	25	12	19	105		399
	15	42	20	6	14	27	27	6	31	32	38	52	25	45		29
C	3	30	3	2	1	10			5	6	5	1	15	19		100
	5	48	4	3	2	16			8	10	8	1	23	30		158
	11	35	2	5	2	7			12	16	12	4	31	13		11
D		13		9	19	13			6				28	13	- 1	100
		4		3	6	4			2				9	4		12
		3		5	6	2			3				12	2		2
RD DF						- 1						1		- 1		1
TOTAL	3	10	15	5	7	17	2	2	5	5	5	2	5	17		100
	46	137	211	63	94	239	22	34	68	63	66	23	75	234		1375
	100	100	100	100	100	100	100	100	100	100	100	100	100	100		100

1012 - 2 - KIND OF ACTIVITY vs. FIELD OF TASK

This table shows that research people are doing fewer tasks proportionally in the fields of aircraft and flight equipment, communications, and electronics, and more in the fields of medicine and physics, fluid mechanics, and nuclear physics. Engineering people are doing more tasks in the field of guided missiles than in other fields.

10-12	01	02	03	05	06	10	11	12	14	15	1[illegible]	22	25	26	30	31
A	1 3 4	8 17 65	6 12 29	8 16 8	 1 2	1 2 5	1 11	1 2 2	7 14 29	4 9 33	27 56 70	2 4 3	19 39 46	 1 3	7 14 7	1 3
B	8 52 68	1 4 15	2 14 33	19 130 64	6 41 68	3 22 50	1 6 67	11 72 71	4 25 51	1 5 19	1 9 11	12 78 63	4 30 35	3 19 63	11 73 34	4 24 63
C	6 3 4	 	4 2 5	11 5 2	2 1 2	 	 	9 4 4	9 4 8	4 2 7	9 4 5	15 7 6	 	6 3 10	11 5 2	4 2 5
D	2 6 8	1 3 12	2 7 17	13 41 20	3 9 15	3 10 23	 1 11	4 12 12	1 4 8	3 11 41	3 9 11	3 11 9	4 14 16	2 5 17	16 115 53	2 7 18
E	10 13 17	2 2 8	5 7 17	9 11 5	6 8 13	8 10 23	1 1 11	9 11 11	2 2 4	 	2 [illegible] 3	18 23 19	2 2 2	2 2 7	6 8 4	3 4 11
NO OF	- 1		- 1	1		- 1							1			
TOTAL	6 77 100	2 26 100	3 42 100	15 203 100	4 60 100	3 44 100	1 9 100	7 101 100	4 49 100	2 27 100	6 80 100	9 123 100	6 85 100	2 30 100	16 215 100	3 38 100

1014 - 2 - TYPE OF ACTIVITY vs. KIND OF TASK

Using the chi squared test with the null hypothesis that the kind of person is independent of the kind of task, it was found that at the five percent confidence level the hypothesis should be rejected. This is obviously correct in that the heavy diagonal cell numbers clearly show that there is a relationship. This, however, is as might be expected.

10-14	A	B	C	D	E	RD DF	TOTAL
A	74	11	1	11	3		100
	156	23	2	23	6		210
	89	3	3	6	6		15
B	2	78	4	11	5		100
	14	523	25	74	35		671
	8	77	40	21	36		49
C		32	57	9	2		100
		15	27	4	1		47
		2	44	1	1		3
D	1	15	1	75	7	1	100
	2	49	4	240	23		318
	1	7	6	67	24		23
E	3	57	3	12	25		100
	4	73	4	16	32		129
	2	11	6	4	33		9
RD DF			1	1			1
TOTAL	13	50	5	26	7	- 1	100
	176	683	62	357	97		1375
	100	100	100	100	100		100

1025 - 2 - KIND OF ACTIVITY vs. CLASS OF CHUNK

This table indicates that there is no relationship between the kind of activity of a person and the classes of the chunks of information. (See Table 1425.)

10-25	A	B	C	E	F	H	J	M	RD DF	TOTAL
A	13	1	22	8	29	7	14	6		100
	89	5	156	53	202	50	100	40		695
	23	3	17	20	10	23	19	16		15
B	8	3	19	5	45	4	10	5	1	100
	185	81	435	119	1039	104	243	119		2325
	49	57	46	44	53	48	47	46		50
C	6	1	34	8	40	4	4	4	- 1	100
	10	2	57	13	66	6	6	6		166
	3	1	6	5	3	3	1	2		4
D	6	3	21	7	43	4	11	5		100
	70	33	230	72	475	40	115	57		1092
	18	23	24	27	24	19	22	22		23
E	6	5	15	3	45	4	13	9		100
	25	22	62	12	185	15	53	35		409
	7	15	7	4	9	7	10	14		9
RD DF		1			1		1			- 1
TOTAL	8	3	20	6	42	5	11	5		100
	379	143	940	269	1967	215	517	257		4687
	100	100	100	100	100	100	100	100		100

1034 - 2 - KIND OF ACTIVITY vs. USE OF SEARCH AIDS

This table shows that in those cases where the use of search aids was examined, they were already being used or would have been used relatively more often by research people than by other people.

10-34	A	B	F	X	RD DF	TOTAL
A	4 31 12	18 128 27	9 60 39	68 476 13	1	100 695 15
B	7 156 59	9 198 42	3 61 39	82 1910 50	- 1	100 2325 50
C	9 15 6	11 18 4	1 1 1	80 132 3	- 1	100 166 4
D	4 49 19	8 90 19	3 28 18	85 925 24		100 1092 23
E	3 12 5	8 32 7	1 5 3	88 360 9		100 409 9
RD DF	- 1	1		1		- 1
TOTAL	6 263 100	10 466 100	3 155 100	81 3803 100		100 4687 100

1042 - 2 - KIND OF ACTIVITY vs. FIRST SOURCE

As shown by this comparison, libraries were seldom used as a first source of information; however, the statistics show that they were more often used by research people and less by R&D support personnel.

10-42	A	B	E	F	H	I	K	L	RD DF	TOTAL
A	9 62 13	4 29 11	17 117 11	11 78 32	11 76 13	24 168 20	2 15 6	22 150 15		100 695 15
B	11 247 50	6 131 49	24 550 54	5 112 46	14 325 53	16 378 46	6 144 62	19 438 44	- 1	100 2325 50
C	11 19 4	5 8 3	19 32 3	2 4 2	13 22 4	20 33 4	5 9 4	23 39 4	2	100 166 4
D	12 128 26	6 66 25	23 254 25	3 35 14	12 134 22	17 191 23	4 40 17	22 244 25	1	100 1092 23
E	10 40 8	8 34 13	18 74 7	3 14 6	12 51 8	12 50 6	6 26 11	29 120 12	2	100 409 9
RD DF	- 1	- 1				1				- 1
TOTAL	11 496 100	6 268 100	22 1027 100	5 243 100	13 608 100	17 820 100	5 234 100	21 991 100		100 4687 100

1048 - 2 - KIND OF ACTIVITY vs. POST TASK INFORMATION

This comparison shows that, proportionally, research people seem to find more information after the completion of the task than do people in other activities.

10-48	A	B	BLNK	RD OF	TOTAL
A	17	81	1	1	100
	36	171	3		210
	21	15	6		15
B	14	82	3	1	100
	97	553	21		671
	56	48	39		49
C	6	94			100
	3	44			47
	2	4			3
D	9	85	6		100
	29	271	18		318
	17	24	33		23
E	6	84	9	1	100
	8	109	12		129
	5	9	22		9
RD OF	- 1				1
TOTAL	13	83	4		100
	173	1148	54		1375
	100	100	100		100

1049 - 2 - KIND OF ACTIVITY vs. SEE OR READ TAB

No outstanding features were observed from the data presented in this table.

10-49	A	B	O	RD OF	TOTAL
A	22	21	57		100
	47	44	119		210
	17	14	15		15
B	23	24	53		100
	154	163	354		671
	55	54	45		49
C	17	19	64		100
	8	9	30		47
	3	3	4		3
D	16	19	65		100
	51	59	208		318
	18	19	26		23
E	16	22	62		100
	20	29	80		129
	7	10	10		9
RD OF					1
TOTAL	20	22	58		100
	280	304	791		1375
	100	100	100		100

1050 - 2 - KIND OF ACTIVITY vs. USE OF DDC

No outstanding features were observed from the data presented in this table.

10-50	A	B	BLNK	RD DF	TOTAL
A	49	51			100
	103	107			210
	16	15			15
B	49	51			100
	332	339			671
	52	47			49
C	26	74			100
	12	35			47
	2	5			3
D	41	58	2	- 1	100
	130	183	5		318
	20	25	83		23
E	49	50	1		100
	63	65	1		129
	10	9	17		9
RD DF		- 1			1
TOTAL	47	53			100
	640	729	6		1375
	100	100	100		100

1052 - 2 - KIND OF ACTIVITY vs. USE OF INFORMATION CENTERS

No outstanding features were observed from the data presented in this table.

10-52	A	B	BLNK	RD DF	TOTAL
A	60	38	2		100
	126	80	4		210
	17	13	19		15
B	58	41	1		100
	387	277	7		671
	52	46	33		49
C	51	47	2		100
	24	22	1		47
	3	4	5		3
D	44	53	3		100
	140	170	8		318
	19	28	38		23
E	57	43	1	- 1	100
	73	55	1		129
	10	9	5		9
RD DF	- 1				1
TOTAL	55	44	2	- 1	100
	750	604	21		1375
	100	100	100		100

No outstanding features were observed from the statistics presented in this table.

10-94	A	B	C	D	E	F	G	H	I	J	K	L	M	N	RD DF	TOTAL
A	12	3	6	16	9	28	1	7	1	6	1		3	7		100
	25	7	12	34	19	58	2	14	2	13	3		7	14		210
	54	5	6	54	20	24	9	41	3	21	5		9	6		15
B	2	10	21	2	5	18	2	1	5	5	4	2	4	18	1	100
	12	67	141	13	31	118	16	9	34	33	30	14	30	123		671
	26	49	67	21	33	49	73	26	50	52	45	61	40	53		49
C		6	6	4	6	26		4	6	4	2	2	6	26	2	100
		3	3	2	3	12		2	3	2	1	1	3	12		47
		2	1	3	3	5		6	4	3	2	4	4	5		3
D	2	13	14	3	13	13	1	3	7	3	8	2	6	14	- 2	100
	5	41	45	8	40	41	3	8	22	9	25	7	20	44		318
	11	30	21	13	43	17	14	24	32	14	38	30	27	19		23
E	3	15	8	5	1	8	1	1	5	5	5	1	12	32	- 2	100
	4	19	10	6	1	10	1	1	7	6	7	1	15	41		129
	9	14	5	10	1	4	5	3	10	10	11	4	20	18		9
RD DF				- 1		1	- 1		1		- 1	1		- 1		1
TOTAL	3	10	15	5	7	17	2	2	5	5	5	2	5	17		100
	46	137	211	63	94	239	22	34	68	63	66	23	75	234		1375
	100	100	100	100	100	100	100	100	100	100	100	100	100	100		100

The diagonal line in the table shows that a person's normal field of activity tends to be the same as the field of his recently completed task. This is as would be expected.

11-12	01	02	03	05	06	10	11	12	14	15	16	22	
01	72 69 90				1 1 2		1 1 11	1 1 1				3 3 2	1
02		68 23 88	3 1 2		3 1 2			3 1 1	3 1 2	3 1 4			3
03		2 1 4	64 34 81			4 2 5			8 4 8		2 1 1	6 3 2	2
05				79 157 77	5 9 15		1 1 11	1 1 1	1 1 2			1 2 2	
06		3 2 8	2 1 2	23 15 7	61 39 65	2 1 2		3 2 2					3
10				2 1	81 34 77			5 2 2					5
11			7 1 2		7 1 2		40 6 67					20 3 2	7
12	1 1 1			3 3 1	2 2 3	1 1 2		75 88 87	3 3 6	1 1 4		3 4 3	2
14			2 1 2					2 1 1	78 36 73	2 1 4			
15	3 1 1			10 3 1	3 1 2					52 16 59		3 1 1	6
16			1 1 2	1 1							94 77 96		1
22				1 1	2 2 3	2 2 5	1 1 11	2 2 2	1 1 2	2 3 11		78 102 83	1
25	1 1 1		1 1 2	2 2 1						1 1 4		2 2 2	81
26				4 1	4 1 2						4 1 1		4
30	1 1 1		1 1 2	7 12 6	1 2 3	1 1 2		1 2 2	1 1 2	1 1 4			1
31	2 1 1			2 1	4 2 5					2 1 4			4
34	1 1 1			5 4 2				1 1 1	1 1 2		1 1 1		1
36	4 2 3		2 1 2	4 2 1	2 1 2	2 1 2			2 1 2	4 2 7		6 3 2	
RD DF	1		3	4	- 1				1	- 1	1	1	
TOTAL	6 77 100	2 26 100	3 42 100	15 203 100	4 60 100	3 44 100	1 9 100	7 101 100	4 49 100	2 27 100	6 80 100	9 123 100	6

tivity tends to be the same as the field of his recently completed

11	12	14	15	16	22	25	26	30	31	34	36	RD OF	TOTAL
1 1 11	1 1 1				3 3 2	1 1 1		6 6 3	7 7 7	7 7 10	1	100	96 7
3 1 1	3 1 2	3 1 4				3 1 1		6 2 1			9 3 4	- 1	100 34 2
8 4 8			2 1 1	6 3 2	2 1 1			8 4 2	4 2 2	2 1 1		- 2	100 53 4
1 1 1 11	1 1 1	1 1 2			1 2 2		1 1 3	10 19 9	1 1 3	3 5 5	2 3 4	- 5	100 200 15
3 2 2					3 2 2			2 1	2 1 1			- 1	100 64 5
5 2 2					5 2 2			5 2 1			2 1 1		100 42 3
40 6 67					20 3 2	7 1 1		13 2 1			7 1 1	- 1	100 15 1
75 88 87	3 3 6	1 1 4			3 4 3	2 2 2	2 2 7	5 6 3	2 2 2		2 2 3	- 2	100 117 9
2 1 1	78 36 73	2 1 4					7 3 10	4 2 1	2 1 3		2 1 1	1	100 46 3
		52 16 59			3 1 1	6 2 2		23 7 3					100 31 2
			94 77 96			1 1 1				1 1 1	1 1 1		100 82 6
1 1 11	2 2 2	1 1 2	2 3 11		78 102 83	1 1 1	5 6 20	4 5 2	2 2 5	2 2 2	1 1 1	- 4	100 131 10
			1 1 4		2 2 2	81 66 78		5 4 2		2 2 2	3 2 3		100 81 6
				4 1 1		4 1 1	59 16 53	11 3 1		7 2 2	7 2 3		100 27 2
	1 2 2	1 1 2	1 1 4			1 1 1	1 2 7	78 143 67	1 1 3	1 2 2	8 14 20	- 4	100 184 13
			2 1 4			4 2 2		10 5 2	69 33 87	4 2 2	2 1 1	1	100 48 3
	1 1 1	1 1 2		1 1 1		1 1 1		3 2 1	83 64 67		3 2 3	1	100 77 6
		2 1 2	4 2 7		6 3 2			4 2 1		9 4 4	60 28 40	1	100 47 3
			1	- 1	1	1	3		- 1	1	3		
1 9 100	7 101 100	4 49 100	2 27 100	6 80 100	9 123 100	6 85 100	2 30 100	16 215 100	3 38 100	7 96 100	5 70 100	- 1	100 1375 100

This table shows that people in the fields of communications and electronics wanted to search for material without using a search aid. People in the fields of physics, nuclear physics, and fluid mechanics were found to use, and want to use, search aids to a considerable extent. People in the field of ordnance seldom use search aids.

11-34	A	B	F	X	NO OF	TOTAL
01	6	12	3	80	- 1	100
	18	37	8	246		309
	7	8	5	6		7
02	6	16	6	72		100
	7	17	6	78		108
	3	4	4	2		2
03	2	16	2	79	1	100
	4	31	4	151		190
	2	7	3	4		4
05	15	8	3	75	- 1	100
	102	52	18	521		693
	39	11	12	14		15
06	2	7	1	90		100
	4	16	2	202		224
	2	3	1	5		5
10	3	10	3	84		100
	5	15	5	131		156
	2	3	3	3		3
11	18	2		80		100
	9	1		41		51
	3			1		1
12	4	7	1	89	- 1	100
	16	26	3	351		396
	6	6	2	9		8
14	3	16	9	73	- 1	100
	5	26	14	119		164
	2	6	9	3		3
15	9	11	1	79		100
	9	11	1	80		101
	3	2	1	2		2
16	4	16	11	69		100
	12	46	30	196		284
	5	10	19	5		6
22	3	8	1	89	- 1	100
	12	34	4	400		450
	5	7	3	11		10
25	4	18	5	73		100
	11	52	15	207		285
	4	11	10	5		6
26	2	7	11	80		100
	2	7	10	76		95
	1	2	6	2		2
30	5	7	2	86		100
	31	47	13	540		631
	12	10	8	14		13
31	2	8	3	88	- 1	100
	3	11	4	127		145
	1	2	3	3		3
34	2	7	4	87		100
	6	20	11	240		277
	2	4	7	6		6
36	5	13	5	76	1	100
	7	17	7	97		128
	3	4	5	3		3
NO OF	- 2		- 1	2		1
TOTAL	6	10	3	81		100
	263	466	155	3803		4687
	100	100	100	100		100

AUERBACH

1142 - 1 - FIELD OF ACTIVITY vs. FIRST SOURCE

This table shows that people in aircraft and flight equipment use manufacturers and suppliers proportionally more as a first source of information. People in the field of ordnance do not use the library as a first source of information, whereas medical people do; however, the total use of the library as a first source is small.

11-42	A	B	E	F	H	I	K	L	RD OF	TOTAL
01	11	4	23	2	19	14	11	17	- 1	100
	34	11	71	7	58	42	34	52		309
	7	4	7	3	10	5	15	5		7
02	12	3	19	9	14	24	2	17		100
	13	3	21	10	15	26	2	18		108
	3	1	2	4	2	3	1	2		2
03	10	3	14	13	14	16	3	27		100
	19	5	26	24	27	31	6	52		190
	4	2	3	10	4	4	3	5		4
05	12	7	18	5	15	16	7	21	- 1	100
	82	46	126	33	105	108	50	143		693
	17	17	12	14	17	13	21	14		15
06	11	7	18	5	12	20	3	24		100
	25	15	40	11	27	45	7	54		224
	5	6	4	5	4	5	3	5		5
10	6	11	33	4	4	15	5	21	1	100
	10	17	51	7	7	24	8	32		156
	2	6	5	3	1	3	3	3		3
11	10	2	37	2	8	12	2	27		100
	5	1	19	1	4	6	1	14		51
	1		2		1	1		1		1
12	9	8	25	5	11	16	4	20	2	100
	37	33	100	20	45	65	16	80		396
	7	12	10	8	7	8	7	8		8
14	11	3	18	11	14	24	5	15		100
	18	5	30	16	23	40	8	24		164
	4	2	3	7	4	5	3	2		3
15	22	4	19	1	13	21	2	19	- 1	100
	22	4	19	1	13	21	2	19		101
	4	1	2		2	3	1	2		2
16	8	5	18	10	10	23	2	24		100
	23	15	50	27	27	66	7	69		284
	5	6	5	11	4	8	3	7		6
22	12	4	28	3	13	12	5	22	1	100
	56	20	125	13	60	56	22	98		450
	11	7	12	5	10	7	9	10		10
25	9	4	22	9	13	21	4	18		100
	27	11	63	25	37	59	12	51		285
	5	4	6	10	6	7	5	5		6
26	7	3	34	3	22	11	2	18		100
	7	3	32	3	21	10	2	17		95
	1	1	3	1	3	1	1	2		2
30	13	5	23	3	11	19	5	21		100
	80	31	144	21	70	118	33	134		631
	16	12	14	9	12	14	14	14		13
31	14	6	22	3	16	14	3	23	- 1	100
	20	8	32	5	23	20	4	33		145
	4	3	1	2	4	2	2	3		3
34	5	8	21	6	10	19	6	26	- 1	100
	13	21	58	17	27	53	17	71		277
	3	8	6	7	4	6	7	7		6
36	4	15	16	2	15	23	2	23		100
	5	19	20	2	19	30	3	30		128
	1	7	2	1	3	4	1	3		3
RD OF	1	- 1	2	1	1	2				1
TOTAL	11	6	22	5	13	17	5	21		100
	496	268	1027	243	608	820	234	991		4687
	100	100	100	100	100	100	100	100		100

1148 - 1 - FIELD OF ACTIVITY vs. POST TASK INFORMATION

This table shows that people in mathematics-statistics find relatively more information available after the completion of the task then do people in other fields. The reverse is true for people in the field of ordnance.

11-48	A	B	BLNK	RD OF	TOTAL
01	11 11 6	80 77 7	8 8 15	1	100 96 7
02	21 7 4	74 25 2	6 2 4	- 1	100 34 2
03	15 8 5	83 44 4	2 1 2		100 53 4
05	15 29 17	82 163 14	4 8 15	- 1	100 200 15
06	13 8 5	86 55 5	2 1 2	- 1	100 64 5
10	7 3 2	93 39 3			100 42 3
11	7 1 1	87 13 1	7 1 2	- 1	100 15 1
12	16 19 11	83 97 8	1 1 2		100 117 9
14	20 9 5	78 36 3	2 1 2		100 46 3
15	29 9 5	71 22 2			100 31 2
16	16 13 8	83 68 6	1 1 2		100 82 6
22	5 7 4	91 119 10	4 5 9		100 131 10
25	19 15 9	79 64 6	2 2 4		100 81 6
26	11 3 2	85 23 2	4 1 2		100 27 2
30	10 19 11	84 154 13	6 11 20		100 184 13
31	2 1 1	94 45 4	4 2 4		100 48 3
34	8 6 3	91 70 6	1 1 2		100 77 6
36	11 5 3	72 34 3	17 8 15		100 47 3
RD OF	- 2	1	- 2		
TOTAL	13 173 100	83 1148 100	4 54 100		100 1375 100

1149 - 2 - FIELD OF ACTIVITY vs. USE OF TAB

This table shows that people in the field of aircraft and flight equipment read TAB relatively more often than people in other fields.

11-49	A	B	D	RD OF	TOTAL
01	33 32 11	26 25 8	41 39 5		100 96 7
02	29 10 4	32 11 4	38 13 2	1	100 34 2
03	13 7 3	23 12 4	64 34 4		100 53 4
05	19 37 13	24 48 16	58 115 15	- 1	100 200 15
06	23 15 5	13 8 3	64 41 5		100 64 5
10	26 11 4	29 12 4	45 19 2		100 42 3
11	20 3 1	27 4 1	53 8 1		100 15 1
12	18 21 8	20 23 8	62 73 9		100 117 9
14	39 18 6	20 9 3	41 19 2		100 46 3
15	16 5 2	19 6 2	65 20 3		100 31 2
16	12 10 4	18 15 5	70 57 7		100 82 6
22	14 18 6	18 23 8	69 90 11	- 1	100 131 10
25	28 23 8	22 18 6	49 40 5	1	100 81 6
26	7 2 1	41 11 4	52 14 2		100 27 2
30	17 31 11	22 40 13	61 113 14		100 184 13
31	10 5 2	29 14 5	60 29 4	1	100 48 3
34	23 18 6	25 19 6	52 40 5		100 77 6
36	30 14 5	13 6 2	57 27 3		100 47 3
RD OF		- 2	1		
TOTAL	20 280 100	22 304 100	58 791 100		100 1375 100

1150 - 2 - FIELD OF ACTIVITY vs. USE OF DDC

This table shows that people in the field of fuels and propulsion systems use DDC to a considerable extent. On the other hand, people in the field of medicine do not use DDC.

11-50	A	B	BLNK	RD OF	TOTAL
01	52	47	1		100
	50	45	1		96
	8	6	17		7
02	47	50	3		100
	16	17	1		34
	3	2	17		2
03	55	45			100
	29	24			53
	5	3			4
05	48	52			100
	96	104			200
	15	14			15
06	50	50			100
	32	32			64
	5	4			5
10	64	36			100
	27	15			42
	4	2			3
11	60	40			100
	9	6			15
	1	1			1
12	50	60			100
	47	70			117
	7	10			9
14	54	43	2	1	100
	25	20	1		46
	4	3	17		3
15	42	58			100
	13	18			31
	2	2			2
16	34	66			100
	28	54			82
	4	7			6
22	39	61			100
	51	80			131
	8	11			10
25	60	40			100
	49	32			81
	8	4			6
26	33	67			100
	9	18			27
	1	2			2
30	40	59	1		100
	74	108	2		184
	12	15	33		13
31	42	58			100
	20	28			48
	3	4			3
34	57	43			100
	44	33			77
	7	5			6
36	45	53	2		100
	21	25	1		47
	3	3	17		3
RD OF		2	- 1		
TOTAL	47	53			100
	640	729	6		1375
	100	100	100		100

1152 - 2 - FIELD OF ACTIVITY vs. USE OF INFORMATION CENTERS

No outstanding features were observed from the data presented in this table.

11-52	A	B	BLNK	RD OF	TOTAL
01	58	41	1		100
	56	39	1		96
	7	6	5		7
02	74	21	6	- 1	100
	25	7	2		34
	3	1	10		2
03	60	36	4		100
	32	19	2		53
	4	3	10		4
05	44	56	1	- 1	100
	87	112	1		200
	12	19	5		15
06	50	50			100
	32	32			64
	4	5			5
10	76	21	2	1	100
	32	9	1		42
	4	1	5		3
11	60	40			100
	9	6			15
	1	1			1
12	62	36	2		100
	73	42	2		117
	10	7	10		9
14	65	30	4	1	100
	30	14	2		46
	4	2	10		3
15	45	55			100
	14	17			31
	2	3			2
16	61	38	1		100
	50	31	1		82
	7	5	5		6
22	54	44	2		100
	71	57	3		131
	9	9	14		10
25	62	37	1		100
	50	30	1		81
	7	5	5		6
26	30	70			100
	8	19			27
	1	3			2
30	45	53	2		100
	82	98	4		184
	11	16	19		13
31	42	58			100
	20	28			48
	3	5			3
34	66	34			100
	51	26			77
	7	4			6
36	60	38	2		100
	28	18	1		47
	4	3	5		3
RD OF		2	- 3		
TOTAL	55	44	2	- 1	100
	750	604	21		1375
	100	100	100		100

ARMACH ®

This table shows no outstanding features.

11-56	A	B	BLNK	RO OF	TOTAL
01	33	64	3		100
	32	61	3		96
	9	7	4		7
02	24	74	3	- 1	100
	8	25	1		34
	2	3	1		2
03	28	66	6		100
	15	35	3		53
	4	4	4		4
05	29	69	3	- 1	100
	58	137	5		200
	16	15	6		15
06	31	61	8		100
	20	39	5		64
	5	4	6		5
10	24	74	2		100
	10	31	1		42
	3	3	1		3
11	33	67			100
	5	10			15
	1	1			1
12	28	68	4		100
	33	79	5		117
	9	9	6		9
14	30	63	7		100
	14	29	3		46
	4	3	4		3
15	19	77	3	1	100
	6	24	1		31
	2	3	1		2
16	35	59	6		100
	29	48	5		82
	8	5	6		6
22	19	70	11		100
	25	92	14		131
	7	10	17		10
25	28	64	7	1	100
	23	52	6		81
	6	5	7		6
26	7	93			100
	2	25			27
	1	3			2
30	21	73	5	1	100
	39	135	10		184
	11	15	12		13
31	29	35	35	1	100
	14	17	17		48
	4	2	20		3
34	31	65	4		100
	24	50	3		77
	6	5	4		6
36	28	68	4		100
	13	32	2		47
	4	3	2		3
RO OF	- 2	- 1	- 1		
TOTAL	27	67	6		100
	370	921	84		1375
	100	100	100		100

1194 - 1 - FIELD OF ACTIVITY vs. NATURE OF TASK

This comparison shows that people in the fields of communications, electronics, and ordnance are doing relatively more design tasks than those people engaged in other fields. The comparison also points out that people working in chemistry are doing many tasks of an experimental nature.

11-94	A	B	C	D	E	F	G	H	I	J	K	L	M	N	RD	DF	
01	2	9	14	1	2	16		1	2	5	8	3	10	23	1		1
	3	9	15	1	2	15		1	2	5	8	3	10	22			
	7	7	7	2	2	6		3	3	8	12	13	13	9			
02	10	9	9	12	9	15			3				9	21	- 2		1
	6	3	3	4	3	5			1	1			1	7			
	13	2	1	6	3	2			1	2			1	3			
03	6	6	13	19		23	2	2	4	4	6		2	15	- 2		1
	3	3	7	10		12	1	1	2	2	3		1	8			
	7	2	3	16		5	5	3	3	3	5		1	3			
05	2	14	30		2	12		1	6	3	7	3	4	18	- 2		1
	4	27	60		4	23		2	11	6	13	6	8	34			
	9	20	28		4	10		6	16	10	20	26	11	15			
06		9	27	5	5	16		2	6	5	6	2	3	16	- 2		1
		6	17	3	3	10		1	4	3	4	1	2	10			
		4	8	5	3	4		3	6	5	6	4	3	4			
10	2	7	12	5		26	7		7		5	5		24			1
	1	3	5	2		11	3		3		2	2		10			
	2	2	2	3		5	14		4		3	9		4			
11		27	20		13	13			7	7			7	7	- 1		1
		4	3		2	2			1	1			1	1			
		3	1		2	1			1	2			1				
12	2	11	7		6	26	2	1	8	8	4	1	9	16	- 1		1
	2	13	8		7	30	2	1	9	9	5	1	11	19			
	4	9	4		7	13	9	3	13	14	8	4	15	8			
14	2	11	13	4	4	22		7	2	13	4		7	11			1
	1	5	6	2	2	10		3	1	6	2		3	5			
	2	4	3	3	2	4		9	1	10	3		4	2			
15	10	3	6	6	35	16		3		3			6	10	2		1
	3	1	2	2	11	5		1		1			2	3			
	7	1	1	3	12	2		3		2			3	1			
16	7	2	2	20		29	5	13	4	6	2		2	6	2		1
	6	2	2	16		24	4	11	3	5	2		2	5			
	13	1	1	25		10	18	32	4	8	3		3	2			
22	1	6	27	2	7	22	5	2	3	3	5	1	3	14	- 1		1
	1	8	36	2	9	29	7	2	4	4	6	1	4	18			
	2	6	17	3	10	12	32	6	6	6	9	4	5	8			
25	7	6	9	7	11	26	1	4	2	5	1		2	21	2		1
	6	5	4	6	9	21	1	3	2	4	1		2	17			
	13	4	2	10	10	9	5	9	3	6	2		3	7			
26	4	22	11		4	4	15		11	4	4	4	4	15	- 2		1
	1	6	3		1	1	4		3	1	1	1	1	4			
	2	4	1		1		18		4	2	2	4	1	2			
30	2	13	15	1	20	5		3	5	4	7	3	9	12	1		1
	4	24	28	2	36	10		5	10	8	13	5	17	22			
	9	18	13	3	38	4		15	15	13	20	22	23	9			
31	2	8	8		6	25		2	6	2	2	2		35	2		1
	1	4	4		3	12		1	3	1	2	1		17			
	2	3	2		3	5		3	4	2	2	4		7			
34	9	10	10	9	1	17		1	8	5	5		5	22	2		1
	4	8	8	7	1	13		1	6	4	4		4	17			
	9	6	4	11	1	5		3	9	6	6		5	7			
36		13		13	2	13		2	6	4	2	4	13	28			1
		6		6	1	6		1	3	2	1	2	6	13			
		4		10	1	3		3	4	3	2	9	8	6			
RD DF	- 1		2		1		- 1	- 1	3	- 2	- 3	1		3			
TOTAL	3	10	15	5	7	17	2	2	5	5	5	2	5	17			1
	46	137	211	63	94	239	22	34	68	63	66	23	75	294			
	100	100	100	100	100	100	100	100	100	100	100	100	100	100			

more design
re doing

K	L	N	N	RD OF	TOTAL
3	10	23	1		100
3	10	22			96
13	13	9			7
3	21	7	- 2		100
1		7			34
1		3			2
2	19	8	- 2		100
3	1				53
5	1	3			4
3	4	18	- 2		100
13	6	8	36		200
20	26	11	15		15
2	3	16	- 2		100
4	1	2	10		64
6	4	3	4		5
5	24				100
2	2	10			42
3	9	4			3
7	7		- 1		100
1	1				15
1					1
1	9	16	- 1		100
9	1	11	19		117
8	4	15	8		9
7	11				100
2	3	5			44
3	4	2			3
6	10	2			100
2	3				31
3	1				2
2	6	2			100
2	2	5			82
3	3	2			6
1	3	14	- 1		100
6	1	4	18		131
9	4	5	8		10
2	21	2			100
1	2	17			81
2	3	7			6
4	4	15	- 2		100
1	1	1	4		27
2	4	1	2		2
3	9	12	1		100
13	5	17	22		184
20	22	23	9		13
2	35	2			100
1	1	17			48
2	4	7			3
5	22	2			100
4	4	17			77
6	5	7			6
4	13	28			100
1	2	6	13		47
2	9	8	6		3
- 3	1	3			
2	5	17			100
66	23	75	234		1375
100	100	100	100		100

1214 - 1 - FIELD OF TASK vs. KIND OF TASK

This table shows that relatively few research tasks of a research nature are being performed in the fields of aircraft and flight equipment, guided missiles, and ordnance. There are relatively many more of a research nature being performed in the fields of medicine, physics, nuclear physics, and fluid mechanics. Also, relatively more tasks of an engineering nature are being performed in the field of aircraft and flight equipment.

12-14	A	B	C	D	E	RD OF	TOTAL
01		83	4	6	6	1	100
		64	3	5	5		77
		9	5	1	5		6
02	54	19		27			100
	14	5		7			26
	8	1		2			2
03	36	40	7	14	2	1	100
	15	17	3	6	1		42
	9	2	5	2	1		3
05	5	67	3	23	2		100
	10	136	7	46	4		203
	6	20	11	13	4		15
06	3	70		22	5		100
	2	42		13	3		60
	1	6		4	3		4
10	2	61	7	30			100
	1	27	3	13			44
	1	4	5	4			3
11		56	11	11	22		100
		5	1	1	2		9
		1	2		2		1
12	3	68	8	15	6		100
	3	69	8	15	6		101
	2	10	13	4	6		7
14	22	51	6	14	6	1	100
	11	25	3	7	3		49
	6	4	5	2	3		4
15	22	11	11	52	4		100
	6	3	3	14	1		27
	3		5	4	1		2
16	59	20	1	14	6		100
	47	16	1	11	5		80
	27	2	2	3	5		6
22	4	73	9	9	5		100
	5	90	11	11	6		123
	3	13	18	3	6		9
25	49	34	1	14	1	1	100
	42	29	1	12	1		85
	24	4	2	3	1		6
26	3	53	13	23	7	1	100
	1	16	4	7	2		30
	1	2	6	2	2		2
30	2	27	2	66	3		100
	5	59	4	141	6		215
	3	9	6	39	6		16
31		74	5	8	13		100
		28	2	3	5		38
		4	3	1	5		3
34	10	48	7	26	8	1	100
	10	46	7	25	8		96
	6	7	11	7	8		7
36	6	9	1	29	56	- 1	100
	4	6	1	20	39		70
	2	1	2	6	40		5
RD OF	- 2	1	- 1		2		- 1
TOTAL	13	50	5	26	7	- 1	100
	176	683	62	357	97		1375
	100	100	100	100	100		100

This table shows that there is no relationship between the field of the task and the classes of information.

12-25	A	B	C	E	F	H	J	M	RD DF	TOTAL
01	6 15 4	5 13 9	14 37 4	5 12 4	49 128 7	2 6 3	13 33 6	7 18 7	- 1	100 262 6
02	12 10 3	3 3 2	14 12 1	12 10 4	35 30 2	8 7 3	15 13 3	1 1		100 86 2
03	13 19 5	2 3 2	23 33 4	6 8 3	33 47 2	7 10 5	14 20 4	2 3 1		100 143 3
05	7 53 14	3 18 13	25 179 19	5 33 12	42 299 15	3 22 10	12 84 16	4 27 11	- 1	100 715 15
06	6 12 3	4 8 6	12 26 3	2 5 2	49 104 5	7 15 7	14 30 6	6 13 5		100 213 5
10	3 5 1	2 4 3	28 46 5	2 4 1	46 78 4	3 5 2	10 16 3	6 10 4		100 166 4
11	10 3 1	6 2 1	26 8 1		39 12 1		10 3 1	10 3 1	- 1	100 31 1
12	9 32 8	4 13 9	11 42 4	7 24 9	50 183 9	6 23 11	7 27 5	6 22 9		100 366 8
14	6 11 3	5 9 6	27 48 5	4 7 3	40 72 4	7 12 6	9 16 3	2 3 1		100 178 4
15	11 9 2		14 12 1	26 22 8	20 17 1	14 12 6	11 9 2	5 4 2	- 1	100 85 2
16	8 21 6	1 2 1	24 67 7	3 8 3	39 108 5	3 8 4	16 44 9	7 20 8	- 1	100 278 6
22	6 21 6	2 7 5	21 86 9	7 31 12	45 188 10	5 20 9	9 39 8	6 26 10		100 418 9
25	14 43 11	2 5 3	23 70 7	7 22 8	29 87 4	8 23 11	13 38 7	5 16 6	- 1	100 304 6
26	8 9 2	5 5 3	19 21 2	3 3 1	41 45 2	1 1	17 19 4	6 6 2		100 109 2
30	9 67 18	4 28 20	19 146 16	6 46 17	42 317 16	4 29 13	10 75 15	6 47 18		100 755 16
31	7 8 2	4 5 3	23 27 3	3 3 1	45 52 3	7 8 4	8 9 2	3 4 2		100 116 2
34	9 29 8	4 13 9	16 53 6	7 24 9	45 148 8	2 8 4	9 31 6	7 24 9	1	100 330 7
36	9 12 3	4 5 3	20 27 3	5 7 3	41 54 3	5 6 3	8 11 2	8 10 4		100 132 3
RD DF		2			- 1	- 1	- 2			- 1
TOTAL	8 379 100	3 143 100	20 940 100	6 269 100	42 1967 100	5 215 100	11 517 100	5 257 100		100 4687 100

This table illustrates that r
relationship between the me

12-26	A	B
01	11 49 6	35 160 7
02	5 7 1	22 33 1
03	8 19 2	24 58 3
05	14 157 18	27 296 13
06	14 51 6	28 102 4
10	9 25 3	38 101 4
11	15 7 1	30 14 1
12	10 58 7	34 206 9
14	14 45 5	24 78 3
15	2 2	22 27 1
16	4 19 2	26 125 5
22	15 101 12	29 196 9
25	8 43 5	26 144 6
26	15 26 3	31 55 2
30	13 165 19	31 394 17
31	12 22 3	23 41 2
34	10 52 6	32 174 8
36	9 24 3	28 72 3
RD DF	- 2	2
TOTAL	11 872 100	29 2276 100

This table illustrates that relatively more journals are used for tasks in the field of medicine. It shows no other unusual relationship between the media used to obtain the information and the field of the task.

12-28	A	B	C	D	K	N	P	R	S	T	V	W	Z	RD DF	TOTAL
01	11 49 6	35 160 7	2 11 4	6 27 5	11 52 8	1 3 8	1 5 1	22 100 8	3 13 3	1 3 5	7 32 4	2 2	1 3 7	- 1	100 460 6
02	5 7 1	22 33 1	2 3 1	7 11 2	6 9 1	1 1 3	8 12 3	25 37 3	9 14 3	3 4 7	12 18 2	1 1 2	- 1		100 150 2
03	8 19 2	24 58 3	3 6 2	6 15 3	5 13 2	1 2 5	12 29 8	15 36 3	10 24 5	1 2	15 36 4	1 2	1		100 240 3
05	14 157 18	27 296 13	3 29 11	7 78 13	6 69 11	1 6 16	4 49 13	16 172 13	6 62 14	5 8	14 158 19	1 7 9	1 10 22		100 1098 14
06	14 51 6	28 102 4	5 19 7	8 27 5	7 25 4	1 3 8	3 9 2	17 60 5	6 22 5	1 3 5	9 32 4	2 6 7	1 2	- 1	100 360 5
10	9 25 3	38 101 4	3 9 3	6 16 3	6 16 3		2 6 2	20 53 4	3 8 2	1 2	11 29 3	1 3 4	1 2	1	100 268 3
11	15 7 1	30 14 1	6 3 1	4 2		4 2 1	6 3	2 1	4 2 3	28 13 2				1	100 47 1
12	10 58 7	34 206 9	3 21 8	5 29 5	11 69 11		3 1	20 120 9	3 21 5	1 8 13	10 60 7	1 8 10		2	100 603 8
14	14 45 5	24 78 3	5 16 6	9 30 5	10 33 5	2 7 19	7 24 6	18 60 5	5 17 4	1 2	6 20 2				100 331 4
15	2 2	22 27 1		10 12 2	9 11 2		5 6 2	15 18 1	14 17 4		14 17 2	7 9 11	2 3 7		100 122 2
16	4 19 2	26 125 5	6 26 10	3 15 3	7 34 5	1 5 14	20 94 25	10 45 3	9 42 9	2 3	13 62 7	2 2	1 2	1	100 472 6
22	15 101 12	29 196 9	5 32 12	7 49 8	9 63 10	1 4 11	1 7 2	17 113 9	4 26 6	2 11 18	10 65 8	1 7 9	2 4	- 1	100 676 9
25	8 43 5	26 144 6	2 13 5	8 45 8	5 26 4	1 3	12 65 17	18 99 8	9 50 11	2 3	8 42 5	2 10 12	1 7 15	1	100 547 7
26	15 26 3	31 55 2	2 3 1	5 9 2	12 21 3	1 1 3	3 6 2	14 25 2	3 5 1	2 3 5	12 21 3	1 1 1	2 3 7	- 3	100 179 2
30	13 165 19	31 394 17	3 36 14	10 121 21	9 109 17	3 8	1 16 4	16 199 15	5 65 15	1 10 17	10 121 15	2 20 24	5 11	- 1	100 1264 16
31	12 22 3	23 41 2	3 5 2	8 15 3	7 13 2		3 5 1	27 49 4	4 7 2		11 20 2	1 1 1	2 3 7	- 1	100 181 2
34	10 52 6	32 174 8	3 18 7	10 53 9	8 44 7	1 3	5 26 7	12 65 5	6 31 7	2 3	12 67 8	1 1 1	1 5 11	1	100 539 7
36	9 24 3	28 72 3	5 13 5	9 24 4	10 25 4		6 15 4	14 35 3	8 21 5	1 2 3	7 17 2	2 5 6		1	100 253 3
RD DF	- 2	2	2	- 2	1	- 1	- 1		- 1	1	1	1	- 1		
TOTAL	11 872 100	29 2276 100	3 260 100	7 579 100	8 634 100	37 100	5 379 100	17 1289 100	6 446 100	1 60 100	11 830 100	1 82 100	1 46 100		100 7790 100

1234 - 2 - FIELD OF TASK vs. USE OF SEARCH AIDS

This table shows that people engaged in tasks in the fields of medicine, physics, nuclear physics, and fluid mechanics use search aids proportionally more than those engaged in tasks in other fields.

12-34	A	B	F	X	RD DF	TOTAL
01	4 11 4	12 32 7	1 3 2	82 216 6	1	100 262 6
02	7 6 2	19 16 3	3 3 2	71 61 2		100 86 2
03	3 4 2	15 21 5	2 3 2	80 115 3		100 143 3
05	13 94 36	8 54 12	2 15 10	77 552 15		100 715 15
06	3 7 3	12 25 5	3 6 4	82 175 5		100 213 5
10	3 5 2	14 23 5	3 5 3	80 133 3		100 166 4
11	16 5 2	3 1		81 25 1		100 31 1
12	3 10 4	5 19 4	1 2 1	92 335 9	- 1	100 366 8
14	3 5 2	16 28 6	5 9 6	76 136 4		100 178 4
15	6 5 2	8 7 2	6 5 3	80 68 2		100 85 2
16	4 12 5	17 46 10	9 25 16	70 195 5		100 278 6
22	6 26 10	6 26 6	1 4 3	87 362 10		100 418 9
25	4 12 5	19 57 12	7 22 14	70 213 6		100 304 6
26	4 4 2	12 13 3	4 4 3	81 88 2	- 1	100 109 2
30	4 31 12	7 50 11	4 30 19	85 644 17		100 755 16
31	4 5 2	9 11 2	1 1 1	85 99 3	1	100 116 2
34	4 13 5	6 21 5	3 9 6	87 287 8		100 330 7
36	6 8 3	12 16 3	7 9 6	75 99 3		100 132 3
RD DF	- 3	- 1	- 1	- 4		- 1
TOTAL	6 263 100	10 466 100	3 155 100	81 3803 100		100 4687 100

1242 - 1 - FIELD OF TASK vs. FIRST SOURCE

With one exception, this table does not show any relationship between the field of the task and choice of the first source. The exception is that people performing tasks in the field of aircraft and flight equipment tend to choose manufacturers and suppliers proportionally more as a first source of information.

12-42	A	B	E	F	H	I	K	L	RD OF	TOTAL
01	9 24 5	5 14 5	20 53 5	1 2 1	18 46 8	14 37 5	13 34 15	20 52 5		100 262 6
02	4 5 1	3 3 1	19 16 2	7 6 2	19 16 3	22 19 2	3 3 1	21 18 2		100 86 2
03	12 17 3	3 5 2	13 19 2	16 23 9	13 19 3	10 14 2	3 4 2	29 42 4	1	100 143 3
05	11 79 16	7 48 18	16 114 11	5 34 14	14 103 17	18 128 16	6 43 18	23 166 17		100 715 15
06	10 22 4	7 14 5	23 49 5	4 9 4	12 26 4	20 43 5	5 10 4	19 40 4		100 213 5
10	5 9 2	9 15 6	33 55 5	3 5 2	4 7 1	19 32 4	4 7 3	22 36 4	1	100 166 4
11	6 2	10 3 1	23 7 1		3 1	13 4		45 14 1		100 31 1
12	9 34 7	8 30 11	29 107 10	4 16 7	11 40 7	14 50 6	5 17 7	20 72 7		100 366 8
14	12 21 4	3 5 2	20 36 4	6 10 4	15 26 4	25 44 5	6 11 5	14 25 3	- 1	100 178 4
15	13 11 2	7 6 2	16 14 1	9 8 3	15 13 2	14 12 1		25 21 2	1	100 85 2
16	8 23 5	5 15 6	18 49 5	9 25 10	11 31 5	22 61 7	2 6 3	24 68 7	1	100 278 6
22	13 53 11	4 17 6	29 122 12	2 10 4	13 56 9	12 52 6	5 21 9	21 87 9	1	100 418 9
25	9 26 5	6 17 6	20 60 6	10 30 12	12 37 6	25 75 9	3 9 4	16 50 5	- 1	100 304 6
26	8 9 2	3 3 1	24 26 3	8 9 4	13 14 2	15 16 2	6 6 3	24 26 3	- 1	100 109 2
30	14 107 22	5 36 13	23 174 17	3 25 10	12 94 15	18 139 17	5 40 17	19 140 14	1	100 755 16
31	20 23 5	6 7 3	19 22 2	4 5 2	16 18 3	7 8 1	3 3 1	26 30 3	- 1	100 116 2
34	6 21 4	5 17 6	23 76 7	5 17 7	14 47 8	16 53 6	5 16 7	25 83 8	1	100 330 7
36	8 10 2	10 13 5	21 28 3	7 9 4	11 14 2	25 33 4	3 4 2	16 21 2	- 1	100 132 3
RD OF		1	- 1	1	1	2	- 1			- 1
TOTAL	11 496 100	6 268 100	22 1027 100	5 243 100	13 608 100	17 820 100	5 234 100	21 991 100		100 4687 100

1248 - 1 - FIELD OF TASK vs. POST TASK INFORMATION

No outstanding features were observed from the data presented in this table.

12-48	A	B	BLNK	RC DF	TOTAL
01	12 9 5	84 65 6	4 3 6		100 77 6
02	19 5 3	77 20 2	4 1 2		100 26 2
03	10 4 2	88 37 3	2 1 2		100 42 3
05	16 33 19	82 166 14	2 4 7		100 203 15
06	17 10 6	82 49 4	2 1 2	- 1	100 60 4
10	5 2 1	93 41 4	2 1 2		100 44 3
11		100 9 1			100 9 1
12	17 17 10	83 84 7			100 101 7
14	22 11 6	78 38 3			100 49 4
15	11 3 2	89 24 2			100 27 2
16	16 13 8	83 66 6	1 1 2		100 80 6
22	8 10 6	89 109 9	3 4 7		100 123 9
25	14 14 8	84 71 6			100 85 6
26	13 4 2	87 26 2			100 30 2
30	10 21 12	88 189 16	2 5 9		100 215 16
31	5 2 1	92 35 3	3 1 2		100 38 3
34	7 7 4	90 86 7	3 3 6		100 96 7
36	11 8 5	47 33 3	41 29 54	1	100 70 5
RD DF		2	- 1		- 1
TOTAL	13 173 100	83 1148 100	4 54 100		100 1375 100

1294 - 1 - FIELD OF TASK vs. TASK OUTPUT

This table shows that proportionally more tasks in the field of guided missiles are of a performance a less of a design nature, whereas tasks in the fields of physics, nuclear physics, and fluid mechanics a and more of a performance and characteristics nature.

12-94	A	B	C	D	E	F	G	H	I
01	3 2 4	12 9 7	16 12 6	1 1 2	3 2 2	17 13 5		1 1 3	4 3 4
02	23 6 13	12 3 2	8 2 1	8 2 3	15 4 4	12 3 1		4 1 3	
03	7 3 7	5 2 1	12 5 2	24 10 16		19 8 3	2 1 5	2 1 3	
05	2 4 9	12 25 18	33 67 32	1 2	2 4 4	12 24 10	1 5	2 4 12	4 9 13
06	2 1 2	12 7 5	25 15 7	2 1 2	3 2 2	18 11 5	3 7 9		5 3 4
10	2 1 2	2 1 1	16 7 3	5 2 3		23 10 4	7 3 14		5 2 3
11		33 3 2	11 1			11 1			11 1 1
12	2 2 4	12 12 9	6 6 3		5 5 5	26 26 11	2 2 9	1 1 3	7 7 10
14	2 1 2	10 5 4	8 4 2	4 2 3	2 1 1	27 13 5		6 3 9	6 3 4
15	11 3 7			7 2 3	41 11 12	22 6 3		4 1 3	
16	8 6 13	3 2 1	1 1	20 16 25		30 24 10	5 4 18	13 10 29	5 4 6
22	1 1 2	6 7 5	26 32 15	2 3 5	5 6 6	25 31 13	3 4 18	2 2 6	4 5 7
25	8 7 15	8 7 5	5 4 2	9 8 13	11 9 10	27 23 10	1 1 5	4 3 9	2 2 3
26	3 1 2	27 8 6	13 4 2			3 1	13 4 18		7 2 3
30	1 2 4	12 26 19	17 36 17	2 5 8	21 46 49	7 15 6		2 4 12	6 12 18
31	3 1 2	8 3 2	11 4 2		3 1 1	21 8 3		3 1 3	8 3 4
34	4 4 9	9 9 7	11 11 5	8 8 13	1 1 1	16 15 6			9 9 13
36	1 1 2	11 8 6		3 2 3	3 2 2	10 7 3		3 2 6	4 3 4
RD DF	1		1	- 1	1	2	- 1	- 1	3
TOTAL	3 46 100	10 137 100	15 211 100	5 63 100	7 94 100	17 239 100	2 22 100	2 34 100	5 68 100

are of a performance and characteristics nature and
, and fluid mechanics are less of a design nature

	H	I	J	K	L	M	N	RD OF	TOTAL
	1 1 3	4 3 4	4 3 5	6 5 8	3 2 9	6 5 7	25 19 8	- 1	100 77 6
	4 1 3		4 1 2				15 4 2	- 1	100 26 2
1 5	2 1 3		5 2 3	7 3 5		2 1 1	14 6 3	1	100 42 3
1 5	2 4 12	4 9 13	3 6 10	4 9 14	3 6 26	3 6 8	18 37 16	2	100 203 15
2 9		5 3 4	5 3 5	5 3 5	3 2 9		17 10 4		100 60 4
3 14		5 2 3	2 1 2	5 2 3	5 2 9		30 13 6	- 2	100 44 3
		11 1 1	11 1 2		11 1 4		11 1	1	100 9 1
2 9	1 1 3	7 7 10	5 5 8	6 6 9		9 9 12	20 20 9	- 1	100 101 7
	6 3 9	6 3 4	10 5 8	2 1 2		4 2 3	18 9 4	1	100 49 4
	4 1 3		4 1 2			4 1 1	7 2 1		100 27 2
4 18	13 10 29	5 4 6	6 5 8	1 1 2		3 2 3	6 5 2	- 1	100 80 6
4 18	2 2 6	4 5 7	3 4 6	5 6 9	1 1 4	3 4 5	14 17 7		100 123 9
1 5	4 3 9	2 2 3	5 4 6	2 2 3		1 1 1	16 14 6	1	100 85 6
4 18		7 2 3	20 6 10		3 1 4		10 3 1	1	100 30 2
	2 4 12	6 12 18	4 8 13	9 20 30	2 4 17	5 10 13	13 27 12	- 1	100 215 16
	3 1 3	8 3 4	3 1 2	3 1 2	3 1 4		37 14 6	- 3	100 38 3
		9 9 13	5 5 8	5 5 8	2 2 9	5 5 7	23 22 9	2	100 96 7
	3 2 6	4 3 4	3 2 3	3 2 3	1 1 4	41 29 39	16 11 5	1	100 70 5
1	- 1	3	- 3	- 3	1		- 1		- 1
2 00	2 34 100	5 68 100	5 63 100	5 66 100	2 23 100	5 75 100	17 234 100		100 1375 100

1421 - 1 - KIND OF TASK vs. TASK OUTPUT

No outstanding features were observed from the data presented in this table.

14-21	A	B	C	BLNK	RD OF	TOTAL
A	20 36 13	71 125 13	9 15 12			100 17
B	22 147 51	68 484 50	10 69 56	3 10		100 68
C	26 16 6	73 45 5	2 1 1		- 1	100 6
D	18 65 23	71 253 27	11 38 31	1 3		100 35
E	23 22 8	49 48 5	1 1 1	27 26 87		100 9
RD OF	- 1		- 1			-
TOTAL	21 286 100	68 935 100	9 124 100	2 30 100		100 131 1

1422 - 2 - KIND OF TASK vs. TASK OUTPUT

No outstanding features were observed from the data presented in this table.

14-22	A	B	BLNK	RD OF	TOTAL
A	52 91 11	47 83 16	1 2 5		100 176 13
B	61 415 52	38 260 49	1 6 19		100 683 50
C	68 42 5	32 20 4			100 62 5
D	57 203 25	41 148 28	2 6 14		100 357 26
E	51 49 6	22 21 4	28 27 63	- 1	100 97 7
RD OF	1	- 1	- 1		- 1
TOTAL	58 800 100	39 532 100	3 43 100		100 1375 100

B

1423 - 2 - KIND OF TASK vs. TASK OUTPUT

No outstanding features were observed from the data presented in this table.

14-23	A	B	BLNK	RD DF	TOTAL
A	76 133 12	23 41 22	1 2 6		100 176 13
B	84 574 50	15 103 55	1 6 18		100 683 50
C	87 54 5	13 8 4			100 62 5
D	92 328 28	8 29 16			100 357 26
E	67 65 6	6 6 3	27 26 76		100 97 7
RD DF	- 1				- 1
TOTAL	84 1154 100	14 187 100	2 34 100		100 1375 100

1425 - 1 - KIND OF TASK vs. CLASS OF CHUNK

This table shows that research tasks used a greater amount of concept information than other kinds of tasks.

14-25	A	B	C	E	F	H	J	M	RD DF	TOTAL
A	15 87 23	1 5 3	23 136 14	8 48 18	27 160 8	5 29 13	15 87 17	5 30 12	1	100 582 12
B	7 167 44	4 86 60	18 440 47	5 122 45	46 1110 56	4 108 50	10 250 48	5 121 47	1	100 2404 51
C	9 20 5	1 3 2	28 62 7	7 15 6	40 89 5	4 9 4	3 6 1	8 17 7		100 221 5
D	7 89 23	3 37 26	21 270 29	8 79 29	42 524 27	4 49 23	12 145 28	5 66 26		100 1259 27
E	7 16 4	5 12 8	14 32 3	2 5 2	38 84 4	9 20 9	13 29 6	10 23 9	2	100 221 5
RD DF	1	1				1		- 1		
TOTAL	8 370 100	3 143 100	20 940 100	6 269 100	42 1967 100	5 215 100	11 517 100	5 257 100		100 4687 100

1428 - 2 - KIND OF TASK vs. MEDIA

This table shows that people engaged in engineering and R&D support tasks do not use journals to obtain their information, whereas people performing research tasks use journals to a considerable extent.

14-28	A	B	C	D	K	N	P	R	S	T	V	W	Z	RD DF	TOTAL
A	4 46 5	24 246 11	2 24 9	7 74 13	4 44 7	20 201 53	12 123 10	13 138 31	1 6 10	10 103 12	1 11 13	1 8 17	1		100 1026 13
B	13 525 60	30 1165 51	4 143 55	6 249 43	8 313 49	1 27 73	2 95 25	18 711 55	5 186 42	1 29 48	11 414 50	1 26 32	1 21 46	- 1	100 3904 50
C	10 38 4	29 112 5	4 16 6	7 28 5	13 51 8	4 17 3	12 47 4	5 21 5	1 4 7	11 43 5	1 3 4	1 2	3		100 382 5
D	11 232 27	31 650 29	3 71 27	10 204 35	9 196 31	2 48 14	16 338 26	4 80 18	1 16 27	11 233 28	2 34 41	1 14 30	- 1		100 2121 27
E	9 31 4	29 103 5	2 8 2	7 24 4	8 30 5	1 2 5	5 18 5	20 70 5	6 21 5	1 5 8	10 37 4	2 8 10	1 2 4	- 1	100 357 5
RD DF		- 1	1						- 1		1		1		
TOTAL	11 872 100	29 2276 100	3 260 100	7 579 100	8 634 100	5 37 100	17 379 100	17 1289 100	6 446 100	1 60 100	11 830 100	1 82 100	1 46 100		100 7790 100

This table shows no outstanding features.

14-33	A	B	C	D	BLNK	RD DF	TOTAL
A	24 140 9	31 180 15	28 164 16		17 98 12		100 582 12
B	29 160 10	29 160 13	20 107 10	1 100	22 119 15		100 547 12
C	37 142 9	28 110 9	24 94 9		11 42 5		100 388 8
D	35 227 14	26 169 14	22 143 14		18 118 15	- 1	100 657 14
E	42 338 21	23 183 15	22 181 17		14 110 14	- 1	100 812 17
F	37 81 5	22 49 4	22 49 5		19 42 5		100 221 5
G	36 459 28	26 329 27	20 250 24		18 221 28		100 1259 27
H	30 55 3	29 54 4	26 49 5		15 28 4		100 186 4
BLNK	26 9 1	14 5	37 13 1		23 8 1		100 35 1
RD DF		- 1	- 1		1		
TOTAL	34 1611 100	26 1239 100	22 1050 100	1 100	17 786 100	1	100 4687 100

1436(u) - 1 - KIND OF TASK vs. DESIRED RETRIEVAL TIME

This table shows no outstanding features.

14-36	A	B	C	D	E	F	G	BLNK	RD DF	TOTAL
A	28 162 22	6 36 6	18 107 11	14 82 10	7 41 14	5 32 17	3 17 8	18 105 13	1	100 582 12
B	12 66 9	13 69 11	18 98 10	18 101 12	7 39 13	5 26 14	4 22 10	23 126 16		100 547 12
C	14 55 7	16 62 10	20 77 8	21 83 10	6 24 8	5 19 10	6 25 12	11 43 5	1	100 388 8
D	13 88 12	15 96 16	25 163 16	16 108 13	6 37 12	3 17 9	5 30 14	18 118 15	- 1	100 657 14
E	12 97 13	16 130 21	24 191 19	19 152 18	7 60 20	4 33 18	4 34 16	14 115 14		100 812 17
F	10 21 3	18 40 6	22 49 5	18 40 5	6 14 5	2 4 2	5 11 5	19 42 5		100 221 5
G	17 213 29	12 153 25	22 278 28	17 217 26	5 68 23	3 42 23	5 67 32	18 221 27	1	100 1259 27
H	15 27 4	13 25 4	18 34 3	20 37 4	9 16 5	6 12 6	3 6 3	16 29 4		100 186 4
BLNK	26 9 1	17 6 1	3 1	26 9 1	3 1	3 1 1		23 8 1	- 1	100 35 1
RD DF				1						
TOTAL	16 738 100	13 617 100	21 998 100	18 829 100	6 300 100	4 186 100	5 212 100	17 807 100		100 4687 100

This table shows no outstanding features.

14-39	A	B	C	D	BLNK	RD DF	TOTAL
A	11	55	17		17		100
	62	322	101		97		582
	9	15	10		12		12
B	17	44	17		22		100
	93	240	94		120		547
	13	11	9		15		12
C	14	49	26		11		100
	56	191	99	1	41		388
	8	9	9	33	5		8
D	18	44	21		18	- 1	100
	115	286	138		118		657
	16	13	13		15		14
E	14	42	29		14	1	100
	115	345	238	1	113		812
	16	16	23	33	14		17
F	14	44	23		19		100
	30	98	51	1	41		221
	4	5	5	33	5		5
G	14	46	23		18	- 1	100
	177	576	284		222		1259
	25	27	27		28		27
H	25	42	17		16		100
	47	78	31		30		186
	7	4	3		4		4
BLNK	14	43	20		23		100
	5	15	7		8		35
	1	1	1		1		1
RD DF	1	- 1		1	1		
TOTAL	15	46	22		17		100
	700	2151	1043	3	790		4687
	100	100	100	100	100		100

1442 - 1 - KIND OF TASK vs. FIRST SOURCE

This table shows that people doing research tasks use the library proportionally more and manufacturers proportionally less as a first source of information.

14-42	A	B	E	F	H	I	K	L	RD DF	TOTAL
A	8	4	17	14	11	24	2	20		100
	45	21	99	79	66	141	14	117		582
	9	8	10	33	11	17	6	12		12
B	11	6	22	5	15	15	7	20	- 1	100
	259	142	533	113	350	361	157	489		2404
	52	53	52	47	58	44	67	49		51
C	9	6	25	1	12	17	6	24		100
	20	14	55	3	27	37	13	52		221
	4	5	5	1	4	5	6	5		5
D	12	6	23	3	12	19	3	22		100
	154	76	289	42	147	236	40	275		1259
	31	28	28	17	24	29	17	28		27
E	8	7	23	3	8	20	5	26		100
	18	15	51	6	18	45	10	58		221
	4	6	5	2	3	5	4	6		5
RD DF										
TOTAL	11	6	22	5	13	17	5	21		100
	496	268	1027	243	608	820	234	991		4687
	100	100	100	100	100	100	100	100		100

1448 - 1 - KIND OF TASK vs. POST TASK INFORMATION

This table shows that people doing research tasks find proportionally more information after the completion of the task; R&D support personnel find proportionally less information after the completion of the task.

14-48	A	B	BLNK	RD DF	TOTAL
A	18	80	2		100
	31	141	4		176
	18	12	7		13
B	13	85	2		100
	89	580	14		683
	51	51	26		50
C	11	87	2		100
	7	54	1		62
	4	5	2		5
D	10	90	1	- 1	100
	34	320	3		357
	20	28	6		26
E	12	55	33		100
	12	53	32		97
	7	5	59		7
RD DF		- 1			- 1
TOTAL	13	83	4		100
	173	1148	54		1375
	100	100	100		100

1494 - 1 - KIND OF WORK vs. NATURE OF TASK

This table shows that research tasks are of a concepts, experimentation, and performance and characteristics nature and less of a design nature. The reverse is true for engineering tasks.

14-94	A	B	C	D	E	F	G	H	I	J	K	L	M	N	RD DF	TOTAL
A	15	2	4	19	8	28	1	7	1	5	1		4	6	- 1	100
	26	4	7	33	14	49	2	12	1	9	2		7	10		176
	57	3	3	52	15	21	9	35	1	14	3		9	4		13
B	2	9	23	2	3	17	2	2	6	5	5	1	4	19		100
	13	61	159	12	23	115	14	11	39	36	33	10	26	131		683
	28	45	75	19	24	48	64	32	57	57	50	43	35	56		50
C		6	3	2	5	34	5	2	2	2	5	2	3	31	- 2	100
		4	2	1	3	21	3	1	1	1	3	1	2	19		62
		3	1	2	3	9	14	3	1	2	5	4	3	8		5
D	2	14	12	4	15	11	1	3	7	3	7	3	3	16	- 1	100
	7	50	43	15	52	40	3	9	25	10	25	9	12	57		357
	15	36	20	24	55	17	14	26	37	16	38	39	16	24		26
E		19		2	2	14		1	2	7	3	3	29	18		100
		19		2	2	14		1	2	7	3	3	28	17		97
		13		3	2	6		3	3	11	5	13	37	7		7
RD DF			1		1	- 1	- 1	1	1		- 1	1		1		- 1
TOTAL	3	10	15	5	7	17	2	2	5	5	5	2	5	17		100
	46	137	211	63	94	239	22	34	68	63	66	23	75	234		1375
	100	100	100	100	100	100	100	100	100	100	100	100	100	100		100

1725(u) - 1 - MAN-DAYS OF TASK vs. CLASS OF CHUNK

No outstanding features were observed from the data presented in this table.

17-25	A	B	C	D	E	F	G	H	I	J	K	L	M	RD DF	TOTAL
005	7	4	4	2	5	27	1	4	17	11	5	7	6		100
	156	84	100	53	119	630	35	92	399	263	110	168	144		2353
	41	59	52	40	44	49	47	43	58	51	57	48	56		50
022	8	3	4	3	5	27	2	5	13	12	3	8	5	2	100
	120	48	58	38	81	409	27	79	200	183	50	118	81		1492
	32	34	30	28	30	32	36	37	29	35	26	34	32		32
132	11	1	4	4	8	27	1	6	12	8	4	8	4	2	100
	82	9	32	26	59	196	10	41	88	59	26	60	29		717
	22	6	17	19	22	15	13	19	13	11	14	17	11		15
999	17	2	1	14	8	34	2	2	2	10	5	2	2	- 1	100
	21	2	1	17	10	42	3	3	3	12	6	2	3		125
	6	1	1	13	4	3	4	1		2	3	1	1		3
RD DF	- 1					1				1					
TOTAL	8	3	4	3	6	27	2	5	15	11	4	7	5		100
	379	143	191	134	269	1277	75	215	690	517	192	348	257		4687
	100	100	100	100	100	100	100	100	100	100	100	100	100		100

1728 - 2 - MAN-DAYS OF TASK vs. MEDIA

This table shows that for tasks of a duration of six months or longer, there appears to be a slight increase in the use of journals.

17-28	A	B	C	D	K	N	P	R	S	T	V	W	Z	RD DF	TOTAL
005	13	28	3	7	9		3	16	4	1	15	1	1	- 1	100
	462	1000	110	258	309	13	104	594	136	36	526	31	22		3601
	53	44	42	45	49	35	27	46	30	60	63	38	48		46
022	10	31	3	7	8		6	17	6	1	8	1	1	1	100
	268	819	86	195	215	8	148	457	156	14	214	29	18		2627
	31	36	33	34	34	22	39	35	35	23	26	35	39		34
132	10	29	4	9	7	1	6	15	9	1	6	1		2	100
	135	395	60	121	96	13	87	201	125	9	76	17	6		1341
	15	17	23	21	15	35	23	16	28	15	9	21	13		17
999	3	28	2	2	6	1	18	17	13		6	2		2	100
	7	62	4	5	14	3	40	37	29	1	14	5			221
	1	3	2	1	2	8	11	3	7	2	2	6			3
RD DF				- 1											
TOTAL	11	29	3	7	8		5	17	6	1	11	1	1		100
	872	2276	260	579	634	37	379	1289	446	60	830	82	46		7790
	100	100	100	100	100	100	100	100	100	100	100	100	100		100

This table shows no outstanding features.

17-39	A	B	C	D	BLNK	RD DF	TOTAL
005	16	40	23		21		100
	377	939	540		497		2353
	54	44	52		63		50
022	15	49	22		14		100
	223	726	332	2	209		1492
	32	34	32	67	26		32
132	12	56	21		10	1	100
	89	405	152	1	70		717
	13	19	15	33	9		15
999	9	65	15		11		100
	11	81	19		14		125
	2	4	2		2		3
RD DF	- 1	- 1	- 1				
TOTAL	15	46	22		17		100
	700	2151	1043	3	790		4687
	100	100	100	100	100		100

1735 - 1 - MAN-DAYS OF TASK vs. ACTUAL RETRIEVAL TIME

See comments in Table 1736.

17-35	A	B	C	D	G	X	RD DF	TOTAL
005	8	44	14	8	6	21	- 1	100
	180	1032	327	190	130	494		2353
	51	62	44	21	57	62		50
022	8	29	17	27	4	15		100
	114	435	261	401	63	218		1492
	32	26	36	45	28	27		32
132	7	26	18	33	5	10	1	100
	49	188	132	240	35	73		717
	14	11	18	27	15	9		15
999	6	17	12	51		14		100
	8	21	15	64		17		125
	2	1	2	7		2		3
RD DF	1							
TOTAL	7	36	16	19	5	17		100
	351	1676	735	895	228	802		4687
	100	100	100	100	100	100		100

1736 - 1 - MAN-DAYS OF TASK vs. DESIRED RETRIEVAL TIME

Table 1735 and this table generally show that personnel want and get the required information well within the overall time requirement of the task.

17-36	A	B	C	D	G	X	RD DF	TOTAL
005	14	18	24	18	5	21		100
	319	429	557	423	127	498		2353
	43	70	56	32	60	62		50
022	16	9	21	36	4	15	- 1	100
	241	131	313	535	54	218		1492
	33	21	31	41	25	27		32
132	20	7	15	43	4	10	1	100
	140	53	111	310	30	73		717
	19	9	11	24	14	9		15
999	30	3	14	38	1	14		100
	38	4	17	47	1	18		125
	5	1	2	4		2		3
RD DF		- 1		- 1	1			
TOTAL	16	13	21	28	5	17		100
	738	617	998	1315	212	807		4687
	100	100	100	100	100	100		100

1742 - 1 - MAN-DAYS OF TASK vs. FIRST SOURCE

The data in this table shows the time to perform a task has little or no effect on the choice of the first sources of information.

17-42	A	B	E	F	H	I	K	L	RD DF	TOTAL
005	11	5	20	3	14	18	4	25		100
	252	126	464	72	319	424	103	593		2353
	51	47	45	30	52	52	44	60		50
022	11	7	24	6	12	16	5	19		100
	162	104	363	87	174	238	78	286		1492
	33	39	35	36	29	29	33	29		32
132	10	4	25	9	15	18	7	13	- 1	100
	69	32	176	65	107	128	48	92		717
	14	12	17	27	18	16	21	9		15
999	10	5	19	15	6	24	4	16	1	100
	13	6	24	19	8	30	5	20		125
	3	2	2	8	1	4	2	2		3
RD DF	- 1		1	- 1		- 1				
TOTAL	11	6	22	5	13	17	5	21		100
	496	268	1027	243	608	820	234	991		4687
	100	100	100	100	100	100	100	100		100

2025 - 2 - TASK OUTPUT vs. CLASS OF CHUNK

No outstanding features were observed from the data presented in this table.

20-25	A	B	C	E	F	H	J	M	RD OF	TOTAL
A	9	2	23	8	38	5	10	5		100
	179	35	467	156	767	107	208	97		2016
	47	24	50	58	39	50	40	38		43
B	8	5	16	4	43	5	14	7	- 2	100
	136	82	280	71	747	79	240	119		1754
	36	57	30	26	38	37	46	46		37
C	7	3	21	4	50	3	8	5	- 1	100
	57	24	178	37	422	27	64	39		848
	15	17	19	14	21	13	12	15		18
BLNK	10	3	22	7	45	3	7	3		100
	7	2	15	5	31	2	5	2		69
	2	1	2	2	2	1	1	1		1
RD OF		1	- 1			- 1	1			1
TOTAL	8	3	20	6	42	5	11	5		100
	379	143	940	269	1967	215	517	257		4687
	100	100	100	100	100	100	100	100		100

2125 - 1 - TASK OUTPUT vs. CLASS OF CHUNK

No outstanding features were observed from the data presented in this table.

21-25	A	B	C	E	F	H	J	M	RD OF	TOTAL
A	7	3	18	5	43	5	14	6	- 1	100
	69	28	168	46	406	47	130	56		950
	18	20	18	17	21	22	25	22		20
B	8	3	21	6	41	5	11	6	- 1	100
	263	112	677	197	1346	159	360	187		3301
	69	78	72	73	68	74	70	73		70
C	11	1	22	6	50	2	5	3		100
	47	3	93	25	212	9	23	14		426
	12	2	10	9	11	4	4	5		9
BLNK			20	10	30		40			100
			2	1	3		4			10
							1			
RD OF	1			1						1
TOTAL	8	3	20	6	42	5	11	5		100
	379	143	940	269	1967	215	517	257		4687
	100	100	100	100	100	100	100	100		100

2325 - 2 - TASK OUTPUT vs. CLASS OF CHUNK

No outstanding features were observed from the data presented in this table.

23-25	A	B	C	E	F	H	J	M	RD OF	TOTAL
A	8	4	20	6	42	4	11	5	1	100
	314	120	813	241	1712	181	433	217		4033
	83	84	86	90	87	84	84	84		86
B	10	4	19	4	40	5	12	6		100
	64	23	117	26	249	33	77	34		626
	17	16	12	10	13	15	15	13		13
BLNK	7		38	7	21	4	18	7		100
	2		10	2	6	1	5	2		28
	1		1	1			1	1		1
RD OF	- 1		1	- 1		1				
TOTAL	8	3	20	6	42	5	11	5		100
	379	143	940	269	1967	215	517	257		4687
	100	100	100	100	100	100	100	100		100

2526 - 1 - CLASS OF CHUNK vs. FIELD OF CHUNK

This table shows the class and field of the chunks of information found to be used in the survey. Math and formula ch somewhat unique use from other chunks, as do concept chunks. It was found that concept chunks are used to a consid in the fields of physics, nuclear physics, and fluid mechanics. Also see Tables 1225, 1226 and 4225, 4226.

25-26	01	02	03	05	06	10	11	12	14	15	
A	1	3	6	18	2	1	1	4	3	7	4
	5	12	23	67	6	4	4	16	12	28	
	2	16	13	9	4	3	12	6	4	14	
B	8	1	2	15	3	2	2	6	6		1
	11	2	3	22	5	3	3	8	8		
	5	3	2	3	3	2	9	3	3		
C	4		4	17	2	3	1	4	4	1	4
	36	3	35	160	22	28	8	34	42	12	
	16	4	20	21	13	21	24	12	16	6	
E	1	1	3	7	1	1		3	2	49	2
	3	2	7	19	4	3		7	6	132	
	1	3	4	2	2	2		2	2	67	
F	7	2	4	18	4	3	1	8	8		4
	131	30	71	348	86	67	12	156	153	7	
	56	41	41	46	52	51	35	55	57	4	
H	2	6	4	12	4	3		10	7	4	5
	5	12	8	26	9	6		21	15	9	
	2	16	5	3	5	5		7	6	5	
J	6	2	4	18	5	3	1	5	5	1	8
	30	9	22	93	28	17	5	24	25	7	
	13	12	13	12	17	13	15	8	9	4	
M	4	1	2	11	2	1	1	7	4	1	7
	11	3	4	27	5	3	2	18	9	2	
	5	4	2	4	3	2	6	6	3	1	
RD DF		1			1	1	- 1	1		- 1	
TOTAL	5	2	4	16	4	3	1	6	6	4	4
	232	73	173	762	165	131	34	284	270	197	
	100	100	100	100	100	100	100	100	100	100	

...vey. Math and formula chunks show a ... hunks are used to a considerable extent ... and 4225, 4226.

14	15	16	22	25	26	30	31	34	36	RD DF	TOTAL
3	7	4	3	25	2	11	1	6	2		100
12	28	15	10	93	7	40	5	24	8		379
4	14	7	3	29	4	5	5	8	5		
6		1	3	1	13	22	2	8	3	2	100
8		1	5	2	19	32	3	11	5		143
3			2	1	12	4	3	3	3		
4	1	4	7	4	4	29	2	6	3	1	100
42	12	41	62	42	37	274	22	54	28		940
16	6	20	20	13	24	34	24	17	17		2
2	49	2	4	16	1	5	1	3			100
6	132	5	12	42	3	14	2	7	1		269
2	67	2	4	13	2	2	2	2	1		
8		4	7	4	2	15	2	8	4	- 1	100
153	7	73	146	71	44	291	45	157	79		1967
57	4	36	48	22	28	36	49	49	47		42
7	4	5	10	11	1	13	1	4	3		100
15	9	11	21	24	3	27	3	9	6		215
6	5	5	7	7	2	3	3	3	4		
5	1	8	6	8	4	13	2	7	2		100
25	7	39	33	41	22	67	10	35	10		517
9	4	19	11	13	14	8	11	11	6		1
4	1	7	6	4	8	22	1	9	12	- 3	100
9	2	18	15	9	21	56	2	22	30		257
3	1	9	5	3	13	7	2	7	18		
	- 1	2		- 1	1	1	1		- 1		
6	4	4	6	7	3	17	2	7	4	- 1	100
270	197	203	304	324	156	801	92	319	167		4687
100	100	100	100	100	100	100	100	100	100		10

This table shows the following highlights: concept information is found proportionally more in texts and journals and less in engineering type media. Cost and funding information is obtained by the oral media. Math and formula information is found in texts, manuals, and handbooks. Performance and specification information, to a great extent, comes from category A (engineering media), the oral mode, and in proposals and reports, and is not found in texts. Status information is principally obtained by way of proposals and reports, the oral mode, and journals.

25-28	A	B	C	D	K	N	P	R	S	T	V	W	Z	RD DF	TOTAL
A	3 19 2	23 148 7	1 7 3	5 32 6	4 27 4	1 3	9 59 16	12 78 6	19 120 27	1 4 7	21 136 16	3 4	2 4	2	100 636 8
B	9 19 2	41 87 4	4 8 1	17 37 6			1	16 35 3			8 17 2	1 2 2	3 7 15	1	100 213 3
C	11 162 19	31 481 21	4 54 21	9 145 25	7 111 18	5 14	5 75 20	14 209 16	4 68 15	1 8 13	13 207 25	5 6	1 10 22		100 1540 20
E	4 14 2	17 63 3	1 3 1	16 62 11	4 15 2	1 4 11	5 18 5	11 41 3	26 98 22		13 50 6	2 9 11	1 2		100 378 5
F	16 536 61	29 953 42	4 135 52	8 264 46	9 286 45	16 43	3 98 26	18 576 45	3 91 20	1 27 45	8 264 32	1 25 30	12 26		100 3283 42
H	7 23 3	22 73 3	9 31 12	4 12 2	16 51 8	1 3	3 9 2	20 65 5	2 8 2	4 14 23	2 7 1	9 31 38	1 3 7	1	100 328 4
J	5 49 6	31 308 14	2 17 7	2 24 4	6 61 10	1 9 24	11 104 27	23 225 17	6 56 13	1 5 8	12 119 14	3 4	1 6 13	- 1	100 986 13
M	12 50 6	38 163 7	3 13 5	8 32 6	11 46 7	1 3	4 15 4	14 60 5	1 5 1	2 3	7 30 4	1 4 5	1 5 11		100 426 5
RD DF	- 1	- 1	- 1	- 1		- 1				1					
TOTAL	11 872 100	29 2276 100	3 240 100	7 579 100	8 634 100	37 100	5 379 100	17 1289 100	6 446 100	1 60 100	11 830 100	1 82 100	1 46 100		100 7790 100

2532 - 2 - CLASS OF CHUNK vs. ACTUAL EXPOSURE TO INFORMATION

See comments in Table 2533.

25-32	A	B	C	D	BLNK	RD DF	TOTAL
A	17	35	12	1	35		100
	65	132	45	5	132		379
	4	8	6	14	17		8
B	42	32	14	1	10	1	100
	60	46	20	2	15		143
	4	3	3	6	2		3
C	31	33	15	1	21	- 1	100
	294	306	139	6	195		940
	19	19	18	17	25		20
E	50	25	6		19		100
	134	67	17	1	50		269
	9	4	2	3	6		6
F	36	33	17	1	13		100
	712	651	338	12	254		1967
	47	41	45	33	32		42
H	45	27	22	1	5		100
	97	59	47	2	10		215
	6	4	6	6	1		5
J	16	47	17	1	19		100
	82	243	87	7	98		517
	5	15	12	19	13		11
M	28	37	23		12		100
	72	95	59	1	30		257
	5	6	8	3	4		5
RD DF	1			- 1			
TOTAL	32	34	16	1	17		100
	1516	1599	752	36	784		4687
	100	100	100	100	100		100

2533 - 2 - CLASS OF CHUNK vs. THE DESIRED EXPOSURE TO INFORMATION

This table shows that for concept and status information chunks there is less desire to see just one item of the available information. Math information seekers tend to want to see only one item of the available information.

25-33	A	B	C	BLNK	RD DF	TOTAL
A	19	29	17	35		100
	72	111	64	132		379
	4	9	6	17		8
B	46	24	20	10		100
	66	34	28	15		143
	4	3	3	2		3
C	32	26	21	21		100
	299	246	199	196		940
	19	20	19	25		20
E	51	21	10	19	- 1	100
	137	56	26	50		269
	9	5	2	6		6
F	39	26	22	13		100
	769	506	436	256		1967
	48	41	42	33		42
H	46	22	27	5		100
	98	48	59	10		215
	6	4	6	1		5
J	18	32	31	19		100
	92	166	161	98		517
	6	13	15	12		11
M	30	28	30	11	1	100
	78	73	77	29		257
	5	6	7	4		5
RD DF	- 1	- 1				
TOTAL	34	26	22	17	1	100
	1611	1240	1050	786		4687
	100	100	100	100		100

 CLASS OF CHUNK vs. ACTUAL DEPTH OF INFORMATION DESIRED

This table shows that math aids and formulae and raw data information are commonly received as a specific answer.

25-38	A	B	C	D	BLNK	RD DF	TOTAL
A	15	43	6	1	35		100
	56	163	24	4	132		379
	7	8	2	10	17		8
B	26	24	37	1	11	1	100
	37	35	53	2	16		143
	4	2	5	5	2		3
C	20	41	17	1	21		100
	189	382	164	9	196		940
	22	19	16	21	25		20
E	5	36	39	1	19		100
	14	97	105	2	51		269
	2	5	10	5	6		6
F	18	45	23	1	13		100
	348	889	461	12	257		1967
	41	45	46	29	33		42
H	9	47	39	1	4		100
	19	101	83	3	9		215
	2	5	8	7	1		5
J	27	45	8	2	19	- 1	100
	140	232	39	8	98		517
	16	12	4	19	12		11
M	22	37	28	1	12		100
	56	95	73	2	31		257
	7	5	7	5	4		5
RD DF	- 1	- 1	2	- 1			
TOTAL	18	43	21	1	17		100
	859	1994	1002	42	790		4687
	100	100	100	100	100		10(

2542 - 1 - CLASS OF CHUNK vs. FIRST SOURCE

This table shows that even though its use as a first source is limited, when the library is used, it mostly provides status and concept information. The use of a colleague is the most popular first source, although it is not particularly favored to provide any one class of information. Other highlights of this table are that raw data is often received with the task assignment where status information is not, and the first source for math information tends to be one's own collection.

25–42	A	B	E	F	H	I	K	L	RD DF	TOTAL
A	7 25 5	5 18 7	16 59 6	10 37 15	5 20 3	20 74 9	1 5 2	37 141 14	- 1	100 379 8
B	6 8 2	8 11 4	31 44 4		15 22 4	10 14 2	13 19 8	17 25 3		100 143 3
C	8 76 15	6 60 22	24 224 22	4 36 15	12 110 18	16 155 19	5 43 18	25 236 24		100 940 20
E	7 18 4	3 7 3	15 40 4	7 20 8	13 36 6	34 92 11	1 3 1	20 53 5		100 269 6
F	14 273 55	6 115 43	22 438 43	4 75 31	15 286 47	17 326 40	6 110 47	17 344 35	- 1	100 1967 42
H	20 43 9	6 12 4	20 43 4	4 8 3	13 28 5	22 47 6	3 7 3	13 27 3	- 1	100 215 5
J	6 32 6	5 26 10	21 111 11	11 56 23	12 63 10	15 79 10	4 23 10	25 127 13	1	100 517 11
M	8 21 4	7 19 7	26 68 7	4 11 5	17 43 7	13 33 4	9 24 10	15 38 4	1	100 257 5
RD DF			- 1			- 1	1	- 1		
TOTAL	11 496 100	6 268 100	22 1027 100	5 243 100	13 608 100	17 820 100	5 234 100	21 991 100		100 4687 100

2542(u) - 1 - CLASS OF CHUNK vs. FIRST SOURCE

This table is included to illustrate that no data of any significance is lost by aggregating or pooling the categories of these two questions.

25-42	A	B	C	D	E	F	G	H	I	J	K	L	BLNK	RD DF	TOTAL
A	7 25 5	2 9 10	2 9 5	1 4 7	15 55 6	1 3 8	9 34 17	5 20 3	20 74 9	1 5	1 4 2	2 6 3	36 135 17	- 1	100 379 8
B	6 8 2	1 1 1	7 10 6	3 5 9	27 39 4			15 22 4	10 14 2	1 1 5	13 18 9	7 10 5	10 15 2		100 143 3
C	6 12 2	2 4 4	6 11 6	1 1 2	17 32 3	1 1 3	6 11 5	9 18 3	21 40 5	1 1 5	6 12 6	5 10 5	20 38 5	- 1	100 191 4
D	4 6 1	4 6 6	4 5 3	1 2 4	25 34 3	2 3 8	2 3 1	10 13 2	18 24 3		3 4 2	1 2 1	24 32 4	2	100 134 3
E	7 18 4	2 6 6	1 1		15 40 4		7 20 10	13 36 6	34 92 11		1 3 1	1 3 1	19 50 6	1	100 269 6
F	10 130 26	1 19 20	5 52 35	1 15 27	23 291 30	1 9 24	4 45 22	13 168 28	16 209 25	1 7 37	5 63 29	5 63 31	15 196 25		100 1277 27
G	7 5 1		3 2 1	4 3 5	25 19 2			12 9 1	23 17 2		8 6 3	5 4 2	13 10 1		100 75 2
H	20 43 9	1 2 2	5 10 6	1 2 4	19 41 4	1 3 3	3 7 3	13 28 5	22 47 6	1 3 16	2 4 2	9 19 9	4 8 1		100 215 5
I	21 143 29	3 18 19	2 16 9	1 8 15	18 124 13	1 4 11	2 17 8	17 118 19	17 117 14	2 11	6 38 18	4 25 12	9 60 8	- 1	100 690 15
J	6 32 6	2 8 9	3 18 10	1 5 9	21 106 11	2 12 32	9 44 21	12 63 10	15 79 10	1 5	4 22 10	6 29 14	19 98 12		100 517 11
K	12 23 5	4 8 9	5 9 5	1 1 2	16 31 3		5 9 4	11 21 3	14 26 3		4 7 3	5 9 4	25 48 6	- 2	100 192 4
L	9 30 6	2 7 8	2 8 5	1 2 4	28 99 10	1 3 8	2 6 3	14 49 8	14 48 6	1 5	3 12 6	4 13 6	20 70 9		100 348 7
M	8 21 4	2 5 5	5 14 8	3 7 13	24 61 6	1 3	4 10 5	17 43 7	13 33 4	1 2 11	9 22 10	5 12 6	10 26 3	- 1	100 257 5
RD DF		1	- 1	1		1		1				1	1		

2545 - 1 - CLASS OF CHUNK vs. INFORMATION OBTAINED FROM FIRST SOURCE

This table shows that the first source used to obtain status information did not provide much information. This table also shows that the first source used to obtain raw data information provides a great deal of the information. This, however, might be explained by the fact that raw data is often received with the task assignment.

25–45	A	B	C	D	BLNK	RD OF	TOTAL
A	22 82 5	34 130 8	7 27 9	2 7 8	35 133 17		100 379 8
B	49 70 4	34 49 3	5 7 2	1 2 2	10 15 2	1	100 143 3
C	34 324 18	36 338 20	7 66 21	2 16 19	21 196 25		100 940 20
E	51 138 8	23 63 4	4 12 4	2 5 6	19 51 6	1	100 269 6
F	43 841 46	36 705 42	7 136 44	2 30 35	13 255 32	- 1	100 1967 42
H	64 138 8	23 49 3	6 13 4	3 6 7	4 9 1		100 215 5
J	24 122 7	49 252 15	6 30 10	3 15 17	19 98 12	- 1	100 517 11
M	41 106 6	40 102 6	6 16 5	2 5 6	11 28 4		100 257 5
RD OF	- 2	- 1	1		1		
TOTAL	39 1821 100	36 1688 100	7 307 100	2 86 100	17 785 100	- 1	100 4687 100

2547 See Table 4725(u)

2550 See Table 5025(u)

2593 See Table 9325(u)

2594 See Table 9425

2628 - 2 - FIELD OF CHUNK vs. MEDIA

No outstanding features were observed from the data presented

26–28	A	B	C	D	K
01	11 49 6	34 144 6	4 19 7	5 23 4	12 51 8
02	7 9 1	20 26 1	2 3 1	8 10 2	10 13 2
03	7 19 2	20 57 3	3 8 3	6 18 3	6 17 3
05	17 211 24	27 331 15	3 41 16	7 88 15	6 74 12
06	13 35 4	24 67 3	5 14 5	8 21 4	6 16 3
10	10 21 2	34 73 3	2 5 2	8 17 3	6 13 2
11	13 6 1	27 13 1		4 2	13 6 1
12	9 45 5	35 172 8	2 11 4	3 15 3	14 69 11
14	14 68 8	25 120 5	4 19 7	9 44 8	10 47 7
15	2 5 1	24 69 3	1	11 32 6	4 13 2
16	2 8 1	27 97 4	4 13 5	3 12 2	7 24 4
22	16 76 9	31 153 7	5 23 9	5 26 4	9 45 7
25	4 20 2	25 139 6	2 13 5	6 32 6	7 37 6
26	15 39 4	36 93 4	5 12 5	7 18 3	8 21 3
30	10 136 16	32 422 19	3 38 15	11 148 26	7 96 15
31	16 25 3	21 33 1	4 6 2	8 12 2	12 19 3
34	14 75 9	32 170 7	5 25 10	6 34 6	8 42 7
36	9 25 3	34 97 4	3 9 3	10 27 5	11 31 5
RD OF	- 1		1	- 2	- 1
TOTAL	11 872 100	29 2276 100	3 260 100	7 579 100	8 634 100

- 2 - FIELD OF CHUNK vs. MEDIA

tstanding features were observed from the data presented in this table.

Is table

·B	A	B	C	D	K	N	P	R	S	T	V	W	Z	RD OF	TOTAL
	11	34	4	5	12		3	22	2		4		1	2	100
3	49	144	19	23	51	2	12	95	7	2	18	1	4		427
	6	6	7	4	8	5	3	7	2	3	2	1	9		5
	7	20	2	8	10	1	6	21	10	5	9		1		100
6	9	26	3	10	13	1	8	27	13	7	11		1		129
	1	1	1	2	2	3	2	2	3	12	1		2		2
	7	20	3	6	6	1	14	17	12		15			- 1	100
14	19	57	8	18	17	3	40	49	35	1	43				290
4	2	3	3	3	3	8	11	4	8	2	5				4
	17	27	3	7	6	1	4	14	5		12	1	1	2	100
4	211	331	41	88	74	11	44	172	65	5	151	12	10		1215
44	24	15	16	15	12	30	12	13	15	8	18	15	22		16
	13	24	5	8	6		2	24	5	1	11	1			100
2	35	67	14	21	16		6	67	13	4	32	4			279
6	4	3	5	4	3		2	5	3	7	4	5			4
	10	34	2	8	6		2	23	3		9	1		2	100
2	21	73	5	17	13		4	49	7		20	3	1		213
4	2	3	2	3	2		1	4	2		2	4	2		3
	13	27		4	13		2	13	4		25			- 1	100
2	6	13		2	6		1	6	2		12				48
1	1	1			1						1				1
	9	35	2	3	14			24	2	2	7	2			100
	45	172	11	15	69		1	116	9	8	32	10	1		489
1	5	8	4	3	11			9	2	13	4	12	2		6
	14	25	4	9	10	1	6	16	6		7		1	1	100
6	68	120	19	44	47	7	29	77	27	1	35		3		477
29	8	5	7	8	7	19	8	6	6	2	4		7		6
	2	24		11	4		6	12	23		14	2	1	1	100
6	5	69	1	32	13	1	18	34	68		41	6	3		291
18	1	3		6	2	3	5	3	15		5	7	7		4
	2	27	4	3	7	1	22	13	10		10	1			100
22	8	97	13	12	24	4	79	47	37		37	3			361
79	1	4	5	2	4	11	21	4	8		4	4			5
	16	31	5	5	9			22	1	2	8			1	100
	76	153	23	26	45	2	1	106	3	9	41	2	1		488
1	9	7	9	4	7	5		8	1	15	5	2	2		6
	4	25	2	6	7		11	17	16		10	1	1		100
11	20	139	13	32	37		63	97	87	2	53	8	4		555
63	2	6	5	6	6		17	8	20	3	6	10	9		7
1	15	36	5	7	8		4	11	3		9			2	100
4	39	93	12	18	21	1	9	28	8	1	24	1	1		256
5	4	4	5	3	3	3	2	2	2	2	3	1	2		3
	10	32	3	11	7		2	13	3	1	14	2	1	1	100
2	136	422	38	148	96	4	31	168	40	10	181	27	8		1309
31	16	19	15	26	15	11	8	13	9	17	22	33	17		17
	16	21	4	8	12		1	28	4		6				100
1	25	33	6	12	19		1	44	6		10				156
1	3	1	2	2	3			3	1		1				2
	14	32	5	6	8		4	13	3	1	11		1	2	100
4	75	170	25	34	42		22	68	15	6	60	2	6		525
22	9	7	10	6	7		6	5	3	10	7	2	13		7
	9	34	3	10	11		4	14	1	1	10	1	1	1	100
4	25	97	9	27	31	1	10	39	4	4	29	3	3		282
1	3	4	3	5	5	3	3	3	1	7	3	4	7		4
OF	- 1		1	- 2	- 1	- 1	- 1	1	- 1	- 1	3		- 1		- 2
AL	11	29	3	7	8		5	17	6	1	11	1	1		100
	872	2276	260	579	634	37	379	1289	446	60	830	82	46		7790
5	100	100	100	100	100	100	100	100	100	100	100	100	100		100
37															
1															

2634 - 2 - FIELD OF CHUNK vs. USE OF SEARCH AIDS

This table shows that tasks in the field of medicine tend to use and want to use search aids to a considerable extent. People seeking information in the field of communications and electronics tend not to use or want to use search aids.

26-34	A	P	S	T	V	W	Z	RD OF	TOTAL
	5	2	2		4		1	2	100
	11	95	7	2	18	1	4		427
		7	2	3	2	1	9		5
	5	21	10	5	9		1		100
	4	27	13	7	11		1		129
		2	3	12	1		2		2
	4	7	12		15			- 1	100
	7	49	35	1	43				290
		4	8	2	5				4
	14	4	5		12	1	1	2	100
	10	172	65	5	151	12	10		1215
	4	13	15	8	18	15	22		16
	2	4	5	1	11	1			100
	4	67	13	4	32	4			279
		5	3	7	4	5			4
	2	3			9	1		2	100
	3	49	7		20	3	1		213
		4	2		2	4	2		3
	12	4			25			- 1	100
	4	6	2		12				48
					1				1
	4	2	2		7	2			100
	10	116	9	8	32	10	1		489
	2	9	2	13	4	12	2		6
	3	6			7		1	1	100
	4	77	27	1	35		3		477
		6	6	2	4		7		6
	3	2	23		14	2	1	1	100
	5	34	68		41	6	3		291
		3	15		5	7	7		4
	5	9	10		10	1			100
	1	47	37		37	3			361
		4	8		4	4			5
	8	2	1	2	8			1	100
	2	106	3	9	41	2	1		488
		8	1	15	5	2	2		6
	4	16			10	1	1		100
	1	97	87	2	53	8	4		555
		8	20	3	6	10	9		7
	3	3			9			2	100
	3	28	8	1	24	1	1		256
		2	2	2	3	1	2		3
	4	3	1	1	14	2	1	1	100
	2	168	40	10	181	27	8		1309
		13	9	17	22	33	17		17
	3	4			6				100
		44	6		10				156
		3	1		1				2
	5	3	1	1	11		1	2	100
	1	68	15	6	80	2	6		525
		5	3	10	7	2	13		7
	4	1	1	1	10	1	1	1	100
		39	4	4	29	3	3		282
		3	1	7	3	4	7		4
DF		1	- 1	- 1	3		- 1		- 2
TAL	6	1289	446	60	830	82	46		7790
	26	100	100	100	100	100	100		100
	1								

26-34	A	B	F	X	RD OF	TOTAL
01	5	13	2	80		100
	11	31	4	186		232
	4	7	3	5		5
02	5	18	4	73		100
	4	13	3	53		73
	2	3	2	1		2
03	4	16	4	76		100
	7	28	7	131		173
	3	6	5	3		4
05	14	7	2	77		100
	105	57	15	585		762
	40	12	10	15		16
06	2	12	3	83		100
	4	19	5	137		165
	2	4	3	4		4
10	2	13	3	82		100
	3	17	4	107		131
	1	4	3	3		3
11	12	3		85		100
	4	1		29		34
	2			1		1
12	4	7	1	88		100
	10	19	4	251		284
	4	4	3	7		6
14	3	14	5	79	- 1	100
	7	37	13	213		270
	3	8	8	6		6
15	3	7	4	86		100
	6	14	7	170		197
	2	3	5	4		4
16	5	21	11	63		100
	10	43	23	127		203
	4	9	15	3		4
22	8	6	1	85		100
	23	19	4	258		304
	9	4	3	7		6
25	4	17	6	74	- 1	100
	12	55	18	239		324
	5	12	12	6		7
26	3	10	2	85		100
	4	16	3	133		156
	2	3	2	3		3
30	4	7	3	87	- 1	100
	29	54	25	693		801
	11	12	16	18		17
31	3	11	4	82		100
	3	10	4	75		92
	1	2	3	2		2
34	5	6	3	87	- 1	100
	15	18	9	277		319
	6	4	6	7		7
36	4	9	4	83		100
	6	15	7	139		167
	2	3	5	4		4
RD OF		- 3	- 4	1		- 1
TOTAL	6	10	3	81		100
	263	466	155	3803		4687
	100	100	100	100		100

2642 - 1 - FIELD OF CHUNK vs. FIRST SOURCE

This table shows that tasks in the field of aircraft and flight equipment use manufacturers as a first source of information proportionally more than the rest of the population. Tasks requiring information in the fields of ordnance and guided missiles tend to use a colleague as a first source proportionally more.

26-42	A	B	E	F	H	I	K	L	RD OF	TOTAL
01	14	6	19	2	19	12	10	18		100
	33	13	45	5	43	27	24	42		232
	7	5	4	2	7	3	10	4		5
02	5	4	21	10	14	23	4	19		100
	4	3	15	7	10	17	3	14		73
	1	1	1	3	2	2	1	1		2
03	13	2	13	13	11	19	2	27		100
	22	3	23	22	19	33	4	47		173
	4	1	2	9	3	4	2	5		4
05	11	6	19	4	15	16	7	21	1	100
	86	49	143	33	114	125	52	160		762
	17	18	14	14	19	15	22	16		16
06	13	7	17	4	17	16	2	24		100
	21	12	28	7	28	26	4	39		165
	4	4	3	3	5	3	2	4		4
10	11	9	27	4	8	22	2	17		100
	14	12	36	5	10	29	3	22		131
	3	4	4	2	2	4	1	2		3
11	3	3	29	3	12	12		38		100
	1	1	10	1	4	4		13		34
			1		1			1		1
12	11	7	31	4	11	13	6	17		100
	31	19	89	10	31	38	18	48		284
	6	7	9	4	5	5	8	5		6
14	6	3	22	7	13	26	8	15		100
	17	7	59	18	36	70	22	41		270
	3	3	6	7	6	9	9	4		6
15	8	4	16	12	11	24	2	24	- 1	100
	15	8	32	23	21	47	4	47		197
	3	3	3	9	3	6	2	5		4
16	8	6	15	13	10	27	1	18	2	100
	17	12	31	27	21	55	3	37		203
	3	4	3	11	3	7	1	4		4
22	14	5	31	4	13	11	4	19	- 1	100
	43	14	93	11	40	33	13	57		304
	9	5	9	5	7	4	6	6		6
25	10	4	20	9	8	29	2	19	- 1	100
	33	12	64	30	25	94	6	60		324
	7	4	6	12	4	11	3	6		7
26	8	8	22	4	12	15	10	21		100
	13	12	34	6	19	24	16	32		156
	3	4	3	2	3	3	7	3		3
30	10	6	23	2	12	16	4	26	1	100
	82	48	183	16	100	131	36	205		801
	17	18	18	7	16	16	15	21		17
31	18	7	18	4	20	8	5	20		100
	17	6	17	4	18	7	5	18		92
	3	2	2	2	3	1	2	2		2
34	9	7	24	4	15	12	6	23		100
	30	22	76	13	47	39	18	74		319
	6	8	7	5	8	5	8	7		7
36	10	9	29	3	13	13	2	21		100
	17	15	49	5	22	21	3	35		167
	3	6	5	2	4	3	1	4		4
RD OF	1	3		1	- 1	- 1				- 1
TOTAL	11	6	22	5	13	17	5	21		100
	496	268	1027	243	608	820	234	991		4687
	100	100	100	100	100	100	100	100		100

This table indicates that, when journals are used as the media of information transmission, there is a tendency to want and use search aids.

28-34	A	B	F	X	RD DF	TOTAL
A	9 75 16	9 76 7	1 12 3	81 709 12		100 872 11
B	5 120 25	13 306 29	4 101 24	77 1749 30	1	100 2276 29
C	12 31 7	9 24 2	3 9 2	75 196 3	1	100 260 3
D	5 29 6	14 79 7	4 21 5	78 450 8	- 1	100 579 7
K	7 47 10	8 49 5	4 24 6	81 514 9		100 634 8
N	8 3 1	22 8 1	14 5 1	57 21	- 1	100 37
P	4 16 3	38 144 13	24 91 22	34 128 2		100 379 5
R	8 104 22	21 269 25	6 83 20	65 833 14		100 1289 17
S	4 17 4	22 99 9	13 59 14	61 271 5		100 446 6
T	18 11 2	18 11 1	3 2	60 36 1	1	100 60 1
V		1 5	1 7 2	98 814 14		100 830 11
W	11 9 2	1 1	1 1	87 71 1		100 82 1
Z	11 5 1	2 1	2 1	85 39 1		100 46 1
RD DF		1	1			
TOTAL	6 471 100	14 1072 100	5 416 100	75 5831 100		100 7790 100

This table shows that as the retrieval time increases, there is no significant difference in the use of media.

28-35	A	B	C	D	G	X	RD DF	TOTAL
A	8 71 12	47 408 16	17 146 10	22 193 9	6 50 16	4		100 872 11
B	7 164 29	31 712 28	24 542 37	33 755 37	4 90 28	1 13 2		100 2276 29
C	8 22 4	30 77 3	23 59 4	33 87 4	3 9 3	2 6 1	1	100 260 3
D	9 50 9	51 298 12	19 109 7	18 105 5	2 12 4	1 5 1		100 579 7
K	6 38 7	36 230 9	18 117 8	28 177 9	10 62 19	2 10 1		100 634 8
N		38 14 1	24 9 1	32 12 1		5 2	1	100 37
P	9 34 6	26 100 4	22 82 6	39 148 7	1 5 2	3 10 1		100 379 5
R	9 111 19	34 436 17	21 269 18	30 386 19	6 80 25	1 7 1	- 1	100 1289 17
S	8 34 6	45 201 8	19 85 6	27 122 6		1 4		100 446 6
T	5 3 1	40 24 1	23 14 1	32 19 1				100 60 1
V	3 21 4	4 30 1	1 7	1 9	4 1	91 759 92		100 830 11
W	13 11 2	35 29 1	20 16 1	23 19 1	9 7 2			100 82 1
Z	26 12 2	28 13 1	13 6	11 5	4 2 1	17 8 1	1	100 46 1
RD DF	- 1	- 2	1	1	- 1			
TOTAL	7 571 100	33 2572 100	19 1461 100	26 2037 100	4 321 100	11 828 100		100 7790 100

This table shows that there is no preference for the use of one media over another as a function of the depth of the information desired.

28-39	A	B	C	BLNK	RD DF	TOTAL
A	14	55	31			100
	122	479	269	2		872
	9	12	17			11
B	22	55	22	1		100
	507	1251	504	14		2276
	39	30	32	2		29
C	13	58	28	1		100
	34	150	73	3		260
	3	4	5			3
D	13	59	27	1		100
	76	341	159	3		579
	6	8	10			7
K	24	56	19	1		100
	155	357	118	4		634
	12	9	8	1		8
N	27	51	22			100
	10	19	8			37
	1		1			
P	15	70	14	1		100
	55	266	54	4		379
	4	6	3	1		5
R	19	66	16		- 1	100
	239	845	201	4		1289
	18	20	13	1		17
S	15	65	19		1	100
	69	292	85			446
	5	7	5			6
T	10	72	18			100
	6	43	11			60
		1	1			1
V	2	4	3	91		100
	16	34	23	757		830
	1	1	1	95		11
W	2	55	43			100
	2	45	35			82
		1	2			1
Z	13	46	26	15		100
	6	21	12	7		46
		1	1	1		1
RD DF	2		1	- 1		
TOTAL	17	53	20	10		100
	1297	4143	1552	798		7790
	100	100	100	100		100

2928(u) - 2 - HABITUAL USE OF MEDIA vs. MEDIA

No outstanding features were observed from the data presented in this table.

29-28	A	B	C	D	E	F	G	H	I	J	K	L	M	N
A	2 146 97	1 98 94	3 223 96	3 231 93	18 95	2 112 94	5 300 94	26 1720 93	1 72 90	1 37 95	6 422 95	3 220 97	4 295 94	1 84 92
B	1 3 2	2 6 6	2 8 3	4 15 6	1 5	2 6 5	5 20 6	31 117 6	2 7 9	1 2 5	4 23 5	2 6 3	5 18 6	1 3 8
C								22 5						
BLNK	1 1		1	2 1		1 1	1	2 13 1	1 1				1	
RD DF			1											
TOTAL	2 150 100	1 104 100	3 232 100	3 248 100	19 100	2 119 100	4 341 100	24 1855 100	1 80 100	1 39 100	6 445 100	3 226 100	4 314 100	37 100

3233 - 2 - ACTUAL EXPOSURE TO INFORMATION vs. DESIRED EXPOSURE TO INFORMATION

This table shows that people usually receive the amount of exposure to the available information that they desire.

32-33	A	B	C	BLNK	RD DF	TOTAL
A	94 1430 89	3 48 4	3 38 4			100 1516 32
B	9 142 9	72 1159 93	19 298 28			100 1599 34
C	3 26 2	3 25 2	93 701 67		1	100 752 16
D	33 12 1	22 8 1	36 13 1	8 3	1	100 36 1
BLNK	1			100 783 100		100 784 17
RD DF	- 1					
TOTAL	34 1611 100	26 1240 100	22 1050 100	17 786 100	1	100 4687 100

3334 - 2 - DESIRED EXPOSURE TO INFORM. USE OF SEARCH AIDS

This table shows that people who want a broad expos available information frequently use search aids.

33-34	A	B	F	X	RD
A	2 36 14	3 48 10	1 11 7	94 1516 40	
B	3 31 12	8 104 22	5 67 43	84 1038 27	
C	19 195 74	30 313 67	7 77 50	44 465 12	
BLNK	1	1		100 784 21	
RD DF			1		
TOTAL	6 263 100	10 466 100	3 155 100	81 [illegible] 100	

O	M	N	O	P	Q	R	S	T	U	V	W	X	Y	Z	RO DF	TO
	4	1	1	1	1	17	6	1	5	2	1	3	2		2	100
89	285	34	89	47	57	1167	429	58	312	163	76	183	142	27		6
85	94	92	85	96	97	95	96	97	95	20	93	97	92	59		
	5	1	4		1	15	4	1	3	4	2	1	3	1	- 3	100
15	18	3	15	1	2	58	18	2	12	15	6	3	12	2		
14	6	8	14	2	3	5	4	3	4	2	7	2	8	4		
						13			9	9				48	- 1	100
						3			2	2				11		
									1					24		
										94				1	2	100
1	1		1	1		2	1		4	650		3	1	6		
1			1	2					1	78		2	1	13		
									- 1			- 1	- 1			
	4		1	1	1	16	6	1	4	11	1	2	2	1	- 1	100
105	314	37	105	49	59	1230	446	60	330	830	82	189	155	46		7
100	100	100	100	100	100	100	100	100	100	100	100	100	100	100		

N vs.

EXPOSURE TO INFORMATION vs. RCH AIDS

the

ho want a broad exposure to the y use search aids.

TOTA	F	X	RO DF	TOTAL
100		94		100
161	11	1516		1611
	7	40		34
100		84		100
124	67	1038		1240
	43	27		26
100		44		100
10	77	465		1050
	50	12		22
100		100		100
78		784		786
		21		17
				1
100		81		100
468	155	3903		4687
1	100	100		100

3536 - 1 - ACTUAL LENGTH OF RETRIEVAL TIME vs. DESIRED RETRIEV TIME

This table shows that people generally obtain the information they are seeking within the time available.

35-36	A	B	C	D	G	X	RO DF	TO
A	68	13	11	7	2		- 1	100
	238	46	37	24	6			
	32	7	4	2	3			
B	14	33	33	19	1	1	- 1	100
	235	551	552	318	10	10		1
	32	89	95	24	5	1		
C	12	1	51	35	1	1	- 1	100
	86	6	374	257	4	8		
	12	1	37	20	2	1		
D	17	1	2	78	1		1	100
	155	10	20	701	6	3		
	21	2	2	53	3			
G	7	2	6	5	81		- 1	100
	16	4	13	11	184			
	2	1	1	1	87			
X	1					98	1	100
	8		2	4	2	786		
	1				1	97		
RO DF			1		- 1	1		
TOTAL	16	13	21	28	5	17		100
	738	617	998	1315	212	807		4
	100	100	100	100	100	100		

3336(C) - 2 - DESIRED EXPOSURE TO INFORMATION vs. DESIRED RETRIEVAL TIME

This table shows no outstanding features.

33-36	A	B	C	D	E	F	G	BLNK	RO OF	TOTAL
A	19	22	25	18	5	3	5	1	- 2	100
	300	352	409	282	73	45	135	11		1611
	41	57	41	34	24	24	66	1		34
B	18	11	27	25	9	6	3	1		100
	221	140	337	307	116	71	35	13		1240
	30	23	34	37	39	38	17	2		26
C	20	12	24	23	10	7	3	1		100
	214	124	248	240	110	70	33	11		1050
	29	20	25	29	37	38	16	1		22
BLNK		1					1	98		100
	3	1	4		1		5	772		786
							2	96		17
RO OF							- 1			1
TOTAL	16	13	21	18	6	4	5	17		100
	738	617	998	829	300	186	212	807		4687
	100	100	100	100	100	100	100	100		100

3339 - 3 - DESIRED EXPOSURE TO INFORMATION vs. DESIRED DEPTH OF INFORMATION

This table shows that an exposure to one item of information implies a desire for a specific answer.

33-39	A	B	C	BLNK	RO OF	TOTAL
A	16	45	39	1	- 1	100
	256	722	624	9		1611
	37	34	60	1		34
B	23	62	15			100
	283	771	186			1240
	40	36	18			26
C	15	62	22		1	100
	161	652	232	5		1050
	23	30	22	1		22
BLNK		1		99		100
		7	1	778		786
				98		17
RO OF						1
TOTAL	15	46	22	17		100
	700	2152	1043	792		4687
	100	100	100	100		100

2(c) - 3 - DESIRED DEPTH OF INFORMATION vs. FIRST SOURCE

s table shows no outstanding features.

)-42	A	B	C	D	E	F	G	H	I	J	K	L	BLNK	RD DF	TOTAL
A	14	3	7	2	25	1	5	15	16		5	7			100
	97	18	46	12	175	8	33	104	114	2	37	51	3		700
	20	19	26	22	18	22	16	17	14	11	17	25			15
B	12	2	5	1	23	1	6	14	23	1	5	5		2	100
	255	46	113	29	496	22	139	312	491	11	116	118	4		2152
	51	49	65	53	51	59	67	51	60	58	54	58	1		46
C	13	3	2	1	28	1	3	18	20	1	6	3	1		100
	138	29	16	14	295	7	34	187	213	6	62	35	7		1043
	28	31	9	25	30	19	17	31	26	32	29	17	1		22
K	1				1			1					97		100
	6				6			5	2			1	772		792
	1				1			1					98		17
DF		1								- 1					
AL	11	2	4	1	21	1	4	13	17		5	4	17		100
	496	93	175	55	972	37	206	608	820	19	215	205	786		4687
	100	100	100	100	100	100	100	100	100	100	100	100	100		100

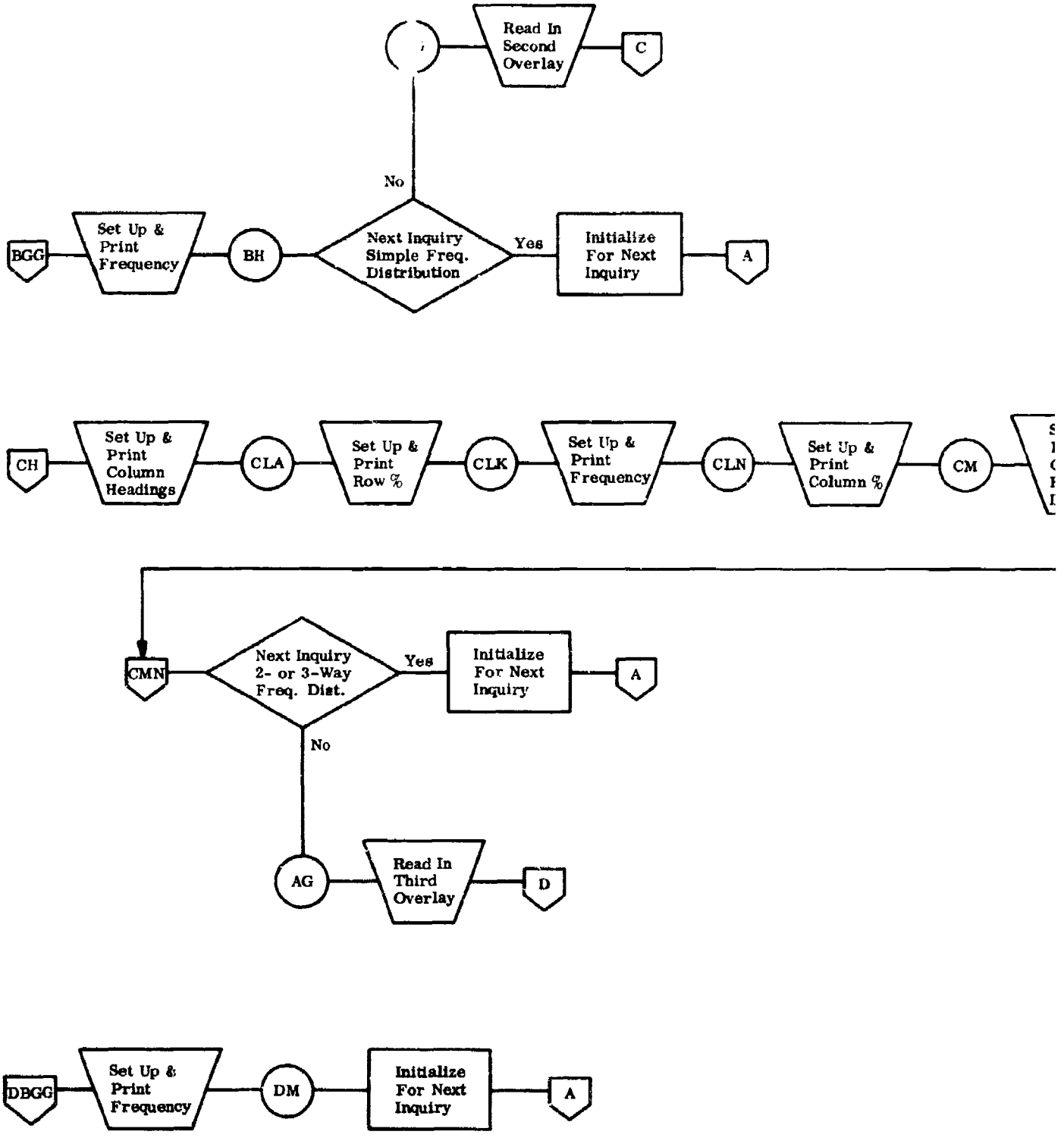

NOTE: Connectors ○ and ⬠

Refer to symbolic labels which appear in the program listing.

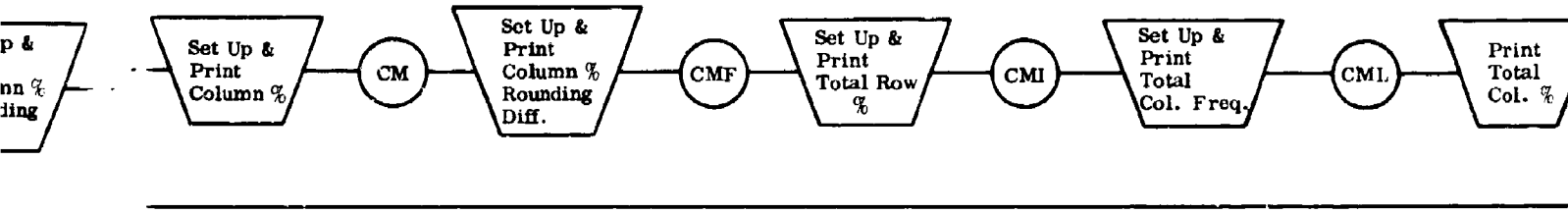

Figure 5-6. General Logic Flow
Format Analyzed Data and Print (
(Sheet 2 of 2)

Two-element intersection

Print positions 1-65.
"INTERSECTION--QUESTION XX, ANSWER IIII--QUESTION YY, ANSWER JJJJ."

Three-element intersection

Print positions 1-91.
"INTERSECTION--QUESTION XX, ANSWER IIII--QUESTION YY, ANSWER JJJJ--QUESTION ZZ, ANSWER KKKK."

(iii) Combination Inquiries. W, appearing below, indicates a field for the specified Interview Question Identification Number. Combination inquiries are identified the same as single or two element intersection inquiries with the addition of "---DISTRIBUTE WW."

(b) Identification of Each Matrix in Three-level Frequency Distribution

Print Positions	Description
1-2	Specified Interview Question Identification Number for first specified interview question.
3	Hyphen.
4-7	Interview Answer to first specified interview question.

(c) Matrix Format for Frequency Distribution Inquiries and Combination Inquiries Following Inquiry Identification Line

All frequency distribution inquiries and combination inquiries.

(i) Column headings

Print Positions	Description
(2-6 are blank for simple frequency distributions and combination inquiries)	
2-3	Specified Interview Question Identification Number for interview answers arrayed vertically as row headings.
4	Hyphen.
5-6	Specified Interview Question Identification. Numbers for interview answers arrayed horizontally as column headings.

rt.
)04)

Print Positions	Description
8-11, repeated every 8th print position for up to 16 matrix columns per print line and continued in subsequent matrix segments for up to 34 matrix columns if required.	Interview answers to specified interview question.
Beginning with 8th print position past first position of last column heading field entered.	"RD DF" for row % rounding difference.
16th print position past first position of last column heading used.	"TOTAL" for row totals.

(ii) Row % (Up to 34 rows for a single matrix)

Print Positions	Description
1-4	Interview answers to specified interview question. (Positions 1-4 are blank for simple frequency distributions and combination inquiries.)
7-8, repeated every 8th print position for each matrix column.	Two digit row % with high order zero suppression.
Three character field beginning with 8th print position past first position of last row % field entered.	First character either blank or minus. Second and third characters with high-orde zero suppression for row % rounding differ
Three character field beginning with 16th print position past first position of last row % field entered.	Always 100 for total row %.

(iii) Frequency (Print line immediately following corresponding row %. Up to 34 rows for a single matrix.)

Print Positions	Description
8-11, repeated every 8th print position for each matrix column.	Frequency for matrix cell. High-order zeros suppressed.
Four character field beginning with 16th print position past first position of last frequency field entered.	Total row frequency with high-order zeros suppressed.

Additional lines for matrix for two- or three-level frequency distributions only.

(i) Column % (Print line immediately following corresponding frequency. Up to 34 rows for a single matrix.)

Print Positions	Description
11-12, repeated every 8th print position for each matrix column.	Two digit column % with high-order zero suppression.
Two character field beginning with 16th print position past first position of last column % field entered.	Two digit column % for total column with high-order zero suppression.

(ii) Column % rounding difference.

Print Positions	Description
1-5	"RD DF" for line header for column % rounding difference line.
10-12, repeated every 8th print position for each matrix column.	First character either blank or minus. Second and third characters with high-order zero suppression for column % rounding difference.
Three character field beginning with 16th print position past first position of last column % rounding difference field entered.	First character either blank or minus. Second and third characters with high-order zero suppression for column % rounding difference of total column.

(iii) Row % in total line.

Print Positions	Description
1-5	"TOTAL" to identify total row.
7-8, repeated every 8th print position for each matrix column.	Two digit row % with high-order zeros suppressed.
Three character field beginning with 8th print position past first position of last row % field entered in total line.	First character either blank or minus. Second and third characters with high-order zero suppression for rounding difference field for row % of total line.
Three character field beginning with 16th print position past first position of last row % field entered in total line.	Always 100 for total row % of total line.

(iv) Frequency in total line

Print Positions	Description
8-11, repeated every 8th print position for each matrix column.	Total column frequency with high-order zeros suppressed.
Four character field beginning with 16th print position past first position of last frequency field entered.	Total row frequency of total line with high-order zeros suppressed.

(v) Column % in total line.

Print Positions	Description
10-12, repeated every 8th print position for each matrix column.	Always 100 for total column %.
Three character field beginning with 16th print position past first position of last total column % field entered in total line.	Always 100 for total column % of row total column.

(d) Format of Responses to Intersection Inquiries Following Inquiry Identification Line

Print Positions	Description
1-4, repeated every 6th print position for up to 22 fields per print line and continued indefinitely in subsequent print lines.	Accession numbers of interviews meeting the specifications of intersection inquiries. High-order zeros are suppressed. (Printing these numbers may be suppressed if desired by entering a '2' in the Record Code field of Inquiry Card.)
Five position field beginning with 6th print position past the first position of the last accession number field entered.	"TOTAL" to precede the number representing the total number of accession numbers meeting the specification of the intersection inquiry.
Four position field beginning with 12th print position past the first position of the last accession number field entered.	Total number of accession numbers meeting the specification of the intersection inquiry.

(3) Operator Instructions

(a) Program Title and Number

FORMAT ANALYZED DATA AND PRINT, ME004

(b) Tapes

(i) Input - Sorted Interview Data Analysis Tape on Tape Drive

(ii) Output- Unreadable record dump tape on Tape Drive 1.

(c) Cards - Input

Insert the Date Card in the object program deck before the first EX card (0167 in card columns 72-75).

(d) Sense Switches. I/O and A-ON, for processing last tape reel of input file. (This is the case when the input file is contained on one reel.)

I/O, A, and G-ON, for processing tape reels other than the last when there is a multi-reel input file. When each input reel is completed, the program rewinds and unloads the reel and halts to permit the operator to mount the next reel. When the operator mounts the last reel of the file, he must turn Sense Switch G Off. He must press START to continue the program.

(4) Programmed Error Instructions

(a) Error 1 (ER01)

(i) Printout: Print contents of input tape record in process.

(ii) Condition: The matrix capacity of 612 cells (not counting rounding difference and total cells) for a simple frequency distribution is exceeded by the input tape record in process. This condition arises because at least one invalid answer was recorded for an interview question.

(iii) Programmed action: The inquiry whose responses exceed the matrix capacity is not processed and all input tape records relating to this inquiry are by-passed.

(iv) Corrective action: Determine from the printout which interview question has an invalid answer. Search the Interview Data Tape for the interview(s) for which an invalid answer was recorded. Correct the Interview Data Tape by a file maintenance run of the program INTERVIEW DATA TAPE-CREATION AND MTCE (ME001). Completely process the inquiry against the corrected Interview Data Tape using the program INTERVIEW DATA TAPE ANALYSIS (ME002).

(b) Error 2 (ER02)

(i) Printout: Same as for Error 1.

(ii) Condition: The matrix capacity of 34 columns (not counting columns for row heading, row percent rounding difference, and the row totals) for two- or three-level frequency distributions is exceeded by the input tape record in process. This condition arises because at least one invalid answer was recorded for an interview question.

(iii) Programmed action: Same as for Error 1.

(iv) Corrective action: Same as for Error 1.

(c) Error 3 (ER03)

(i) Printout: Same as for Error 1.

(ii) Condition: The matrix capacity of 34 rows (not counting rows for column heading, column percent rounding difference, and the column totals) for two- or three-level frequency distributions is exceeded

by the input tape record in process. This condition arises because at least one invalid answer was recorded for an interview question.

(iii) Programmed action: Same as for Error 1.

(iv) Corrective action: Same as for Error 1.

(d) Error 4 (ER04)

(i) Printout: Same as for Error 1.

(ii) Condition: Input tape record contains a record code other than blank, 1, 2, or 3.

(iii) Programmed action: The input tape record in error is not processed. Other tape records for the inquiry are processed.

(iv) Corrective action: This condition should never occur. Consult programmer.

(e) Error 5 (ER05)

(i) Printout: Same as for Error 1.

(ii) Condition: The matrix capacity of 34 cells (not counting rounding difference and total cells) for a combination inquiry is exceeded.

(iii) Programmed action: Same as for Error 1.

(iv) Corrective action: Same as for Error 1.

5.11 COMPUTER RUN TO POOL INTERVIEW ANSWER CATEGORIES

This run combines the answers to certain interview questions into more general categories. The original answers are taken from the Interview Data Tape, and the more general answers along with the unchanged answers are written on the output tape in exactly the same format as the Interview Data Tape. The tables for the conversion appear in the program listing and are identified by the number of the interview question converted. See Figure 5-7 for general logic flowchart.

(1) Input Data Description. The Interview Data Tape is input.

(2) Output Data Description. The Pooled Interview Data Tape is output. The format is exactly the same as for the input tape mentioned above.

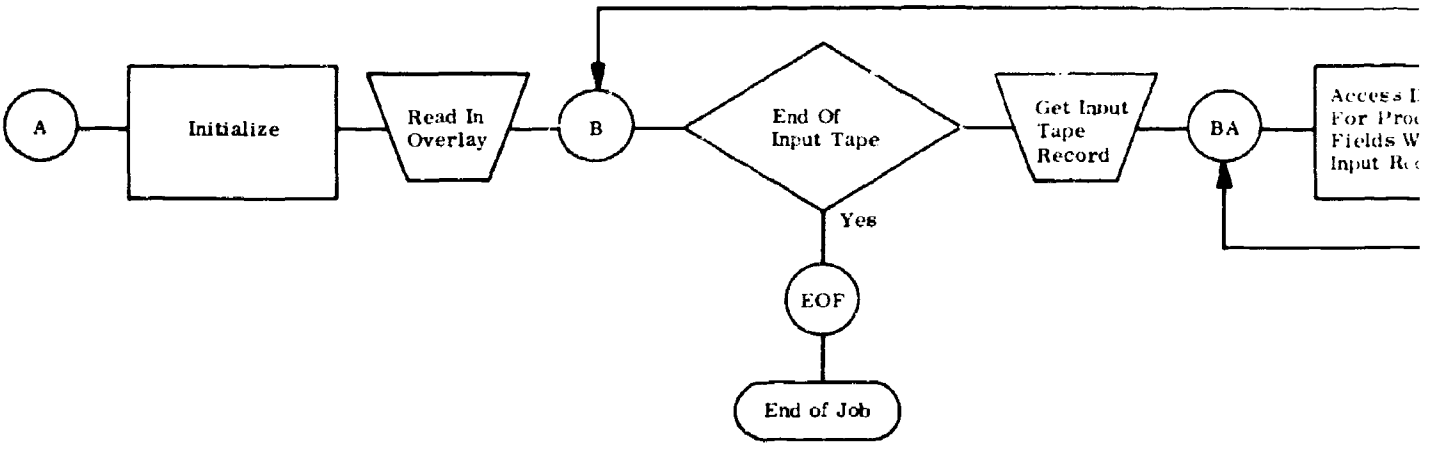

NOTE: Connectors ◯ refer to symbolic labels which appear in the program listing.

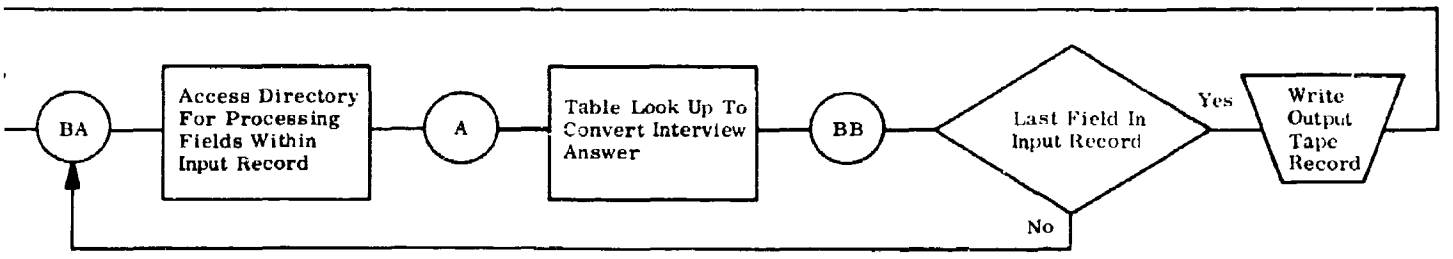

Figure 5-7. General Logic Flow Chart. Interview Data Tape-Pooling Categories (ME005)

(3) Operator Instructions

(a) Program Title and Number

INTERVIEW DATA TAPE-POOLING CATEGORIES, ME005.

(b) Tapes

(i) Input - Interview Data Tape on Tape Drive 2.

(ii) Output - Pooled Interview Data Tape on Tape Drive 3.
Unreadable record dump tape on Tape Drive 1.

(c) Cards

(i) Date Card. Insert the Date Card in the object program deck before the first EX Card (0126 in card columns 72-75).

(ii) RDLIN Card (ReaD Label INformation). Insert a RDLIN Card in the object program deck after the first EX Card (0126 in card columns 72-75). This RDLIN Card is exactly the same as the one used for the computer run to create or maintain the Interview Data Tape.

(d) Sense Switches

(i) I/O and A-ON.

(4) Programmed Error Instructions

(a) Error 1 (ER01)

(i) Printout: The Interview Accession Number of the erroneous input record being converted from the Interview Data Tape is printed. Also printed is a three digit number which identifies the high-order position of the erroneous answer field within the input record.

(ii) Condition: The erroneous field contains an invalid answer which does not appear as the entry argument in the appropriate conversion table.

(iii) Programmed action: The erroneous field is not converted. Its contents are processed to the output tape without change.

(iv) Corrective action: Correct the Interview Data Tape by running the program INTERVIEW DATA TAPE-CREATION AND MTCE (ME001). Repeat the run to pool interview answer categories.

5.12 COMPUTER RUN TO PRINT CELL IDENTIFICATIONS AND FREQUENCIES IN DESCENDING SEQUENCE

This program was developed to satisfy special printed output requirements limited exclusively to two-level frequency distribution inquiries. Briefly, using the two-level frequency distribution inquiry, the frequency with which each answer to a specified question occurs in conjunction with each answer to another specified question on the same interview, can be obtained. The response to the inquiry is printed out in matrix form. The answers to the first specified interview question are arrayed vertically down the left side of the matrix; the answers to the second specified interview question are arrayed horizontally across the top of the matrix. The frequency with which each conjunction of the answers to the two specified interview questions occurs is printed in the appropriate position of the matrix. Thus, the matrix presents a two-level frequency distribution of the answers that were actually given in interviews to the two specified questions.

To facilitate analyzing the data presented in matrix form, it sometimes becomes desirable to rearrange the cells in descending order by frequency. Sometimes only those cells containing at least some minimum frequency are significant, and occasionally it is desirable to identify specifically cells containing a frequency of zero. This computer program provides for these analytical requirements. See Figure 5-8 for general logic flowchart.

(1) Input Data Description

(a) Inquiry Specification Cards - Printout is produced in response to an Inquiry Specification Card, the format of which follows (see Figure 5-9 for card layout):

Card Column	Field	Explanation
1-2	Interview Question Identification	A two-digit number to identify the first specified interview question. Right justify and fill high-order zero.
3-4	Interview Question Identification	Two digit number to identify the second specified interview question. Right justify and fill high-order zero.
5-8	Minimum Cell Frequency	Always numeric and right justified except for the code '9' in column 5 used only to suppress printing cell frequencies in descending sequence.

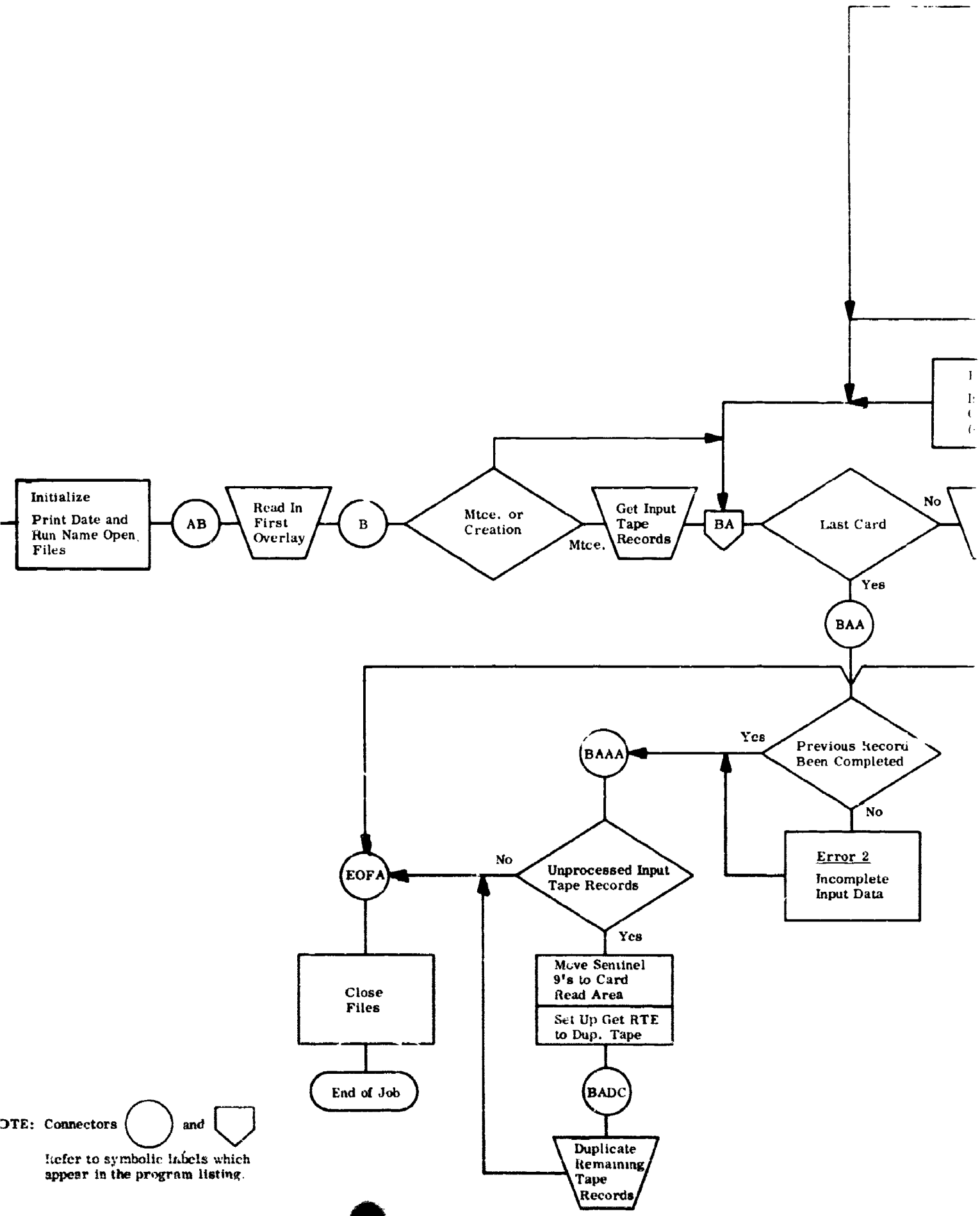

NOTE: Connectors ○ and ⬠ refer to symbolic labels which appear in the program listing.

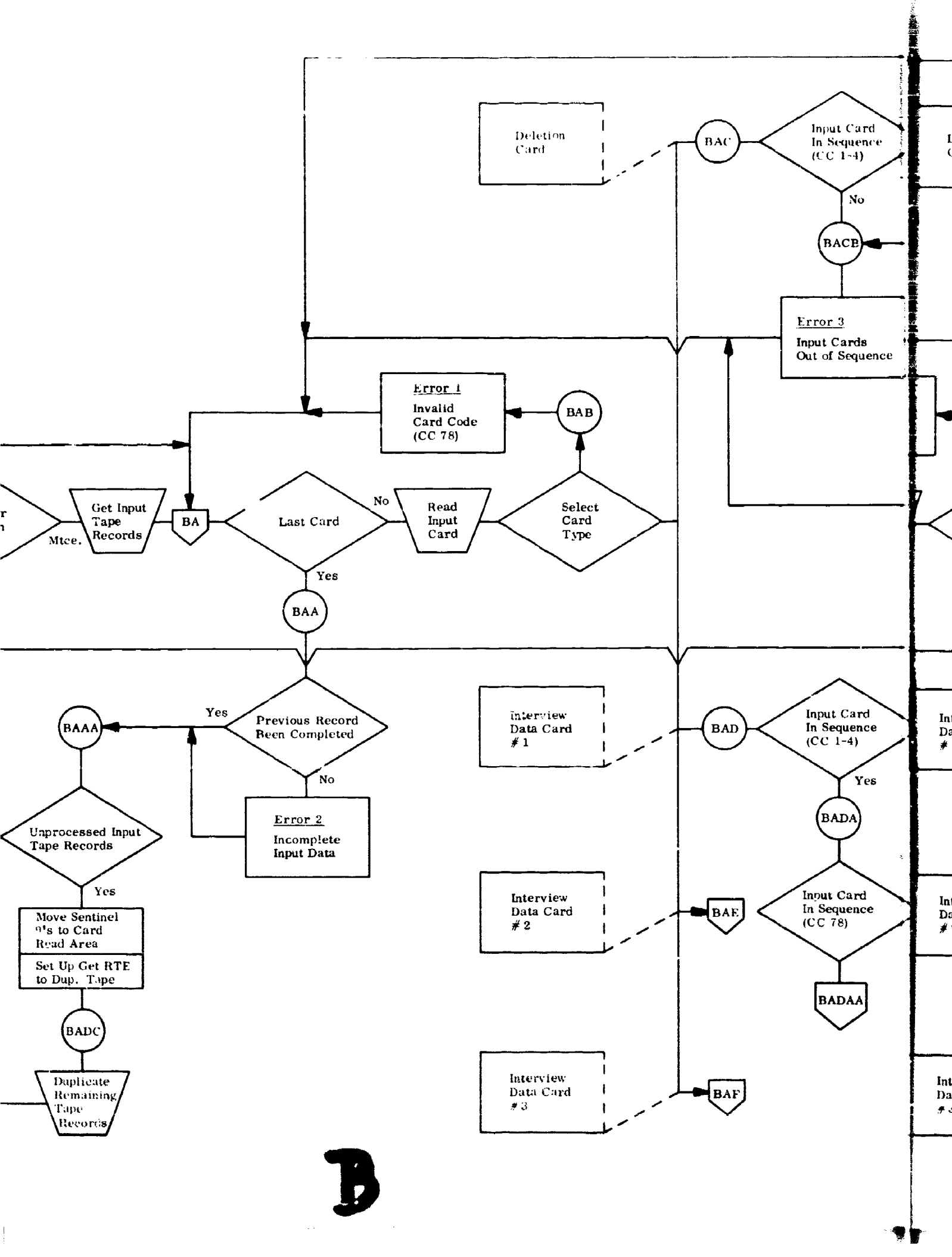
Deletion Card
BAC
Input Card In Sequence (CC 1-4)
No
BACB
Error 3
Input Cards Out of Sequence
Error 1
Invalid Card Code (CC 78)
BAB
Get Input Tape Records
BA
Last Card
No
Read Input Card
Select Card Type
Mtce.
Yes
BAA
Interview Data Card # 1
BAD
Input Card In Sequence (CC 1-4)
Yes
BADA
Input Card In Sequence (CC 78)
BADAA
Interview Data Card # 2
BAE
Interview Data Card # 3
BAF
BAAA
Yes
Previous Record Been Completed
No
Error 2
Incomplete Input Data
Unprocessed Input Tape Records
Yes
Move Sentinel 9's to Card Read Area
Set Up Get RTE to Dup. Tape
BADC
Duplicate Remaining Tape Records

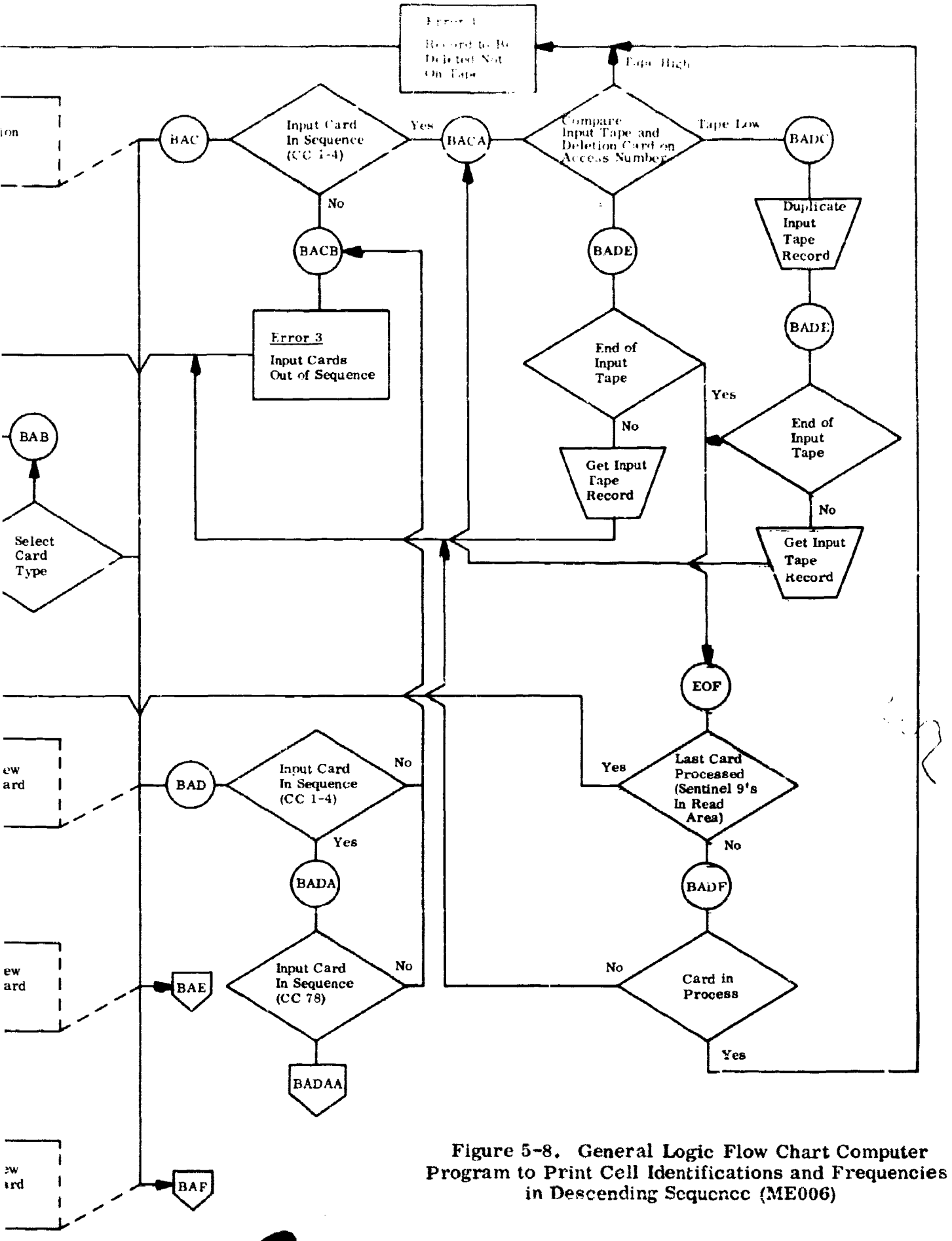

Figure 5-8. General Logic Flow Chart Computer Program to Print Cell Identifications and Frequencies in Descending Sequence (ME006)

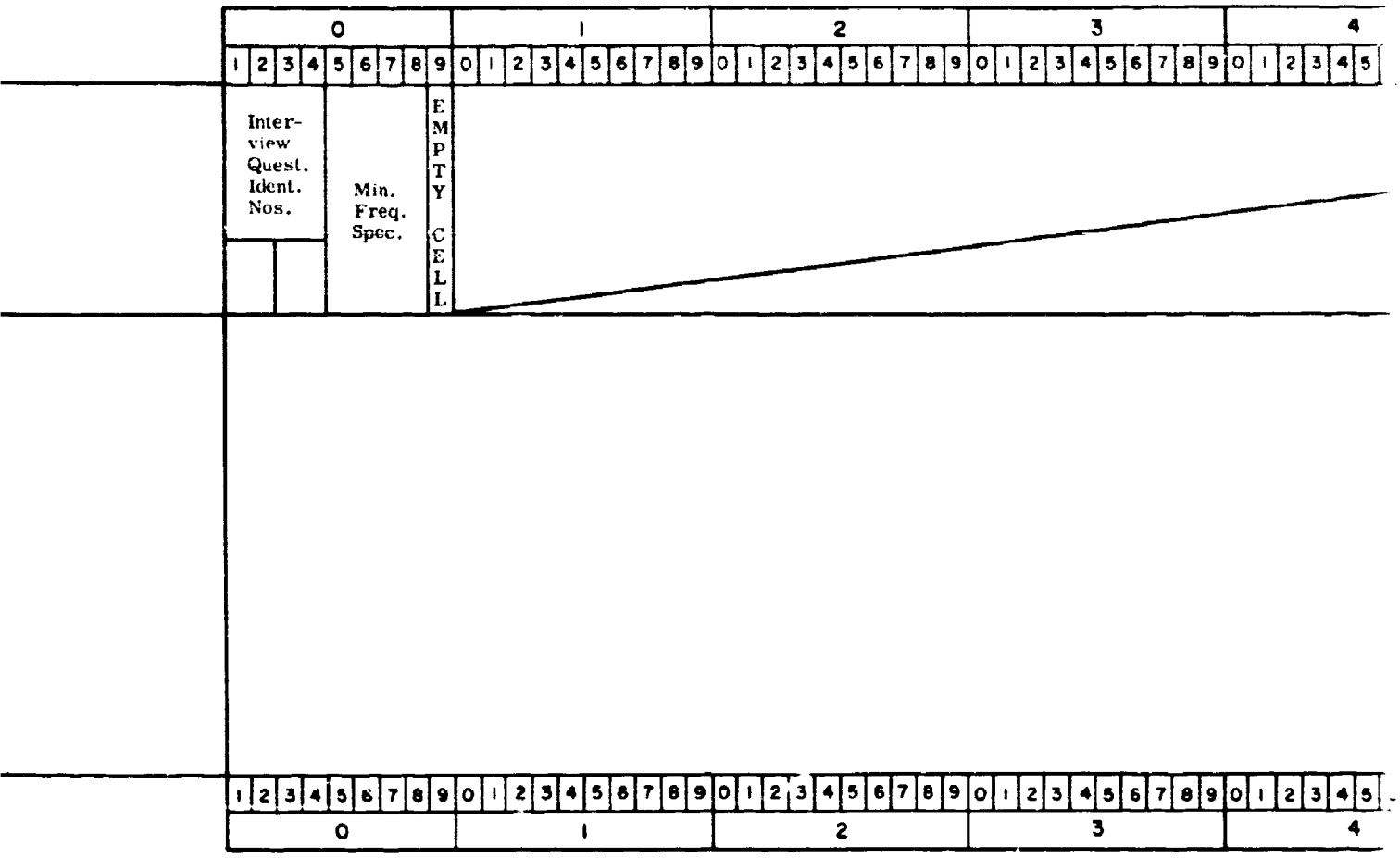
0
1
2
3
4
1 2 3 4 5 6 7 8 9 0 1 2 3 4 5 6 7 8 9 0 1 2 3 4 5 6 7 8 9 0 1 2 3 4 5 6 7 8 9 0 1 2 3 4 5 6 7 8 9 0 1 2 3 4 5
Inter-view Quest. Ident. Nos.
Min. Freq. Spec.
EMPTY CELL
1 2 3 4 5 6 7 8 9 0 1 2 3 4 5 6 7 8 9 0 1 2 3 4 5 6 7 8 9 0 1 2 3 4 5 6 7 8 9 0 1 2 3 4 5 6 7 8 9 0 1 2 3 4 5
0
1
2
3
4

A

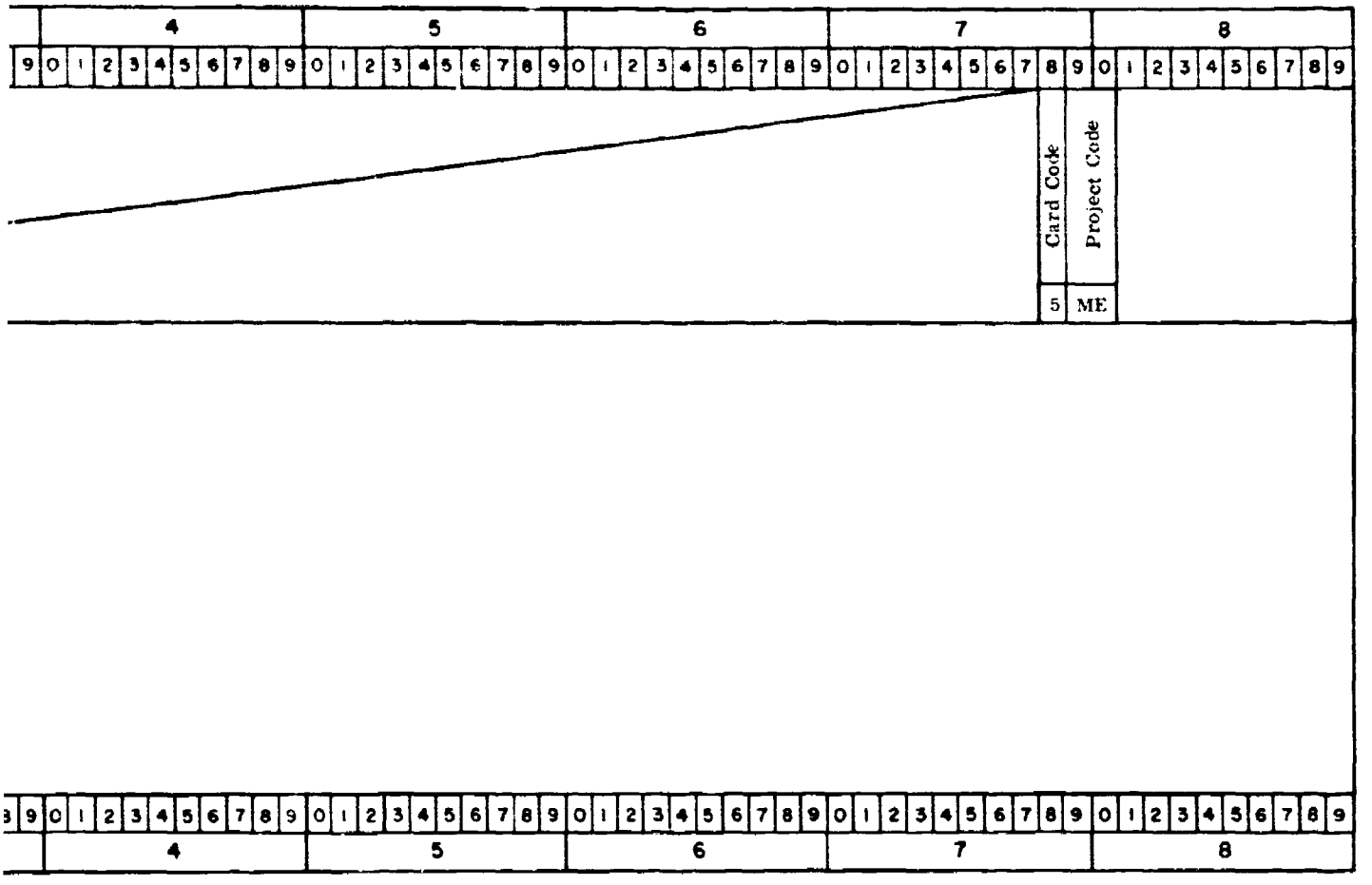

Figure 5-9. Inquiry Specification Card Format Computer Program to Print Cell Identifications and Frequencies in Descending Sequence (ME0(

B

Card Column	Field	Explanation
9	Empty Cell Tag	Either "1" or blank.
10-77		Always blank.
78-80	Card and Project Code	Autoduplicate "5ME".

(b) Tape Sorted Interview Date Analysis Tape

(2) Output Data Description

(a) Printed Listing of Cell Identifications and Frequencies in Descending Sequence - For each printed response to an Inquiry Specification Card, the following lines of information are printed (see Figure 5-10 for print format):

(i) If identification and frequency of each cell containing at least a specified minimum frequency is requested,

Heading line: - This line contains the two Interview Question Identification numbers used to identify the inquiry. It also contains the specified minimum frequency to be used as the basis for selecting the cells for which the identification and frequencies are to be printed.

Data Lines: - For each cell selected, the following data are printed in descending order by cell frequency:

- Answer to first specified interview question (row identification in the matrix).
- Answer to second specified interview question (column identification in the matrix).
- Cell frequency

(ii) If identification of each cell containing zero frequency is requested,

Heading line - This line contains the two Interview Question Identification numbers used to identify the inquiry and the notation "ZERO FREQUENCY."

Data lines - For each cell determined by the program to contain a zero frequency, the following data are printed in alphabetic or numeric sequence by the interview answers serving as row and column identifications in the matrix:

Heading Line	WITHIN Y Y, DISTRIBUTE Z Z MINIMUM CELL FREQUENCY X X X
Data Lines	A A A A B B B B W W W W A A A A B B B B W W W W A A
Heading Line	WITHIN Y Y, DISTRIBUTE Z Z, CELLS WITH ZERO FREQUENCY.
Data Lines	A A A A B B B B A A A A B B B B A A A A B B B B A

Where A Row Identification of Cell of Matrix
B Column Identification of Cell of Matrix
W Frequency Record in Cell
X Specification of Minimum Frequency Recorded in Cells Whose Identification and Frequencies a
Y Identification of Interview Question Whose Answers are Arrayed Vertically in Matrix
Z Identification of Interview Question Whose Answers are Arrayed Vertically in Matrix

A

MINIMUM CELL FREQUENCY X X X X.

A A A A B B B B W W W W A A A A B B B B W W W W A A A A B B B B W W W W

LLS WITH ZERO FREQUENCY.

A A A A B B B B A A A A B B B B A A A A A B B B B A A A A B B B

of Matrix
Cell of Matrix
]
Frequency Recorded in Cells Whose Identification and Frequencies are to be Printed
v Question Whose Answers are Arrayed Vertically in Matrix
v Question Whose Answers are Arrayed Vertically in Matrix

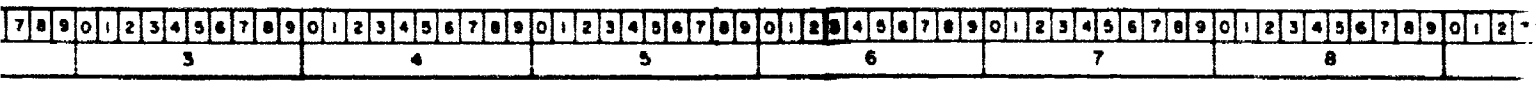

B

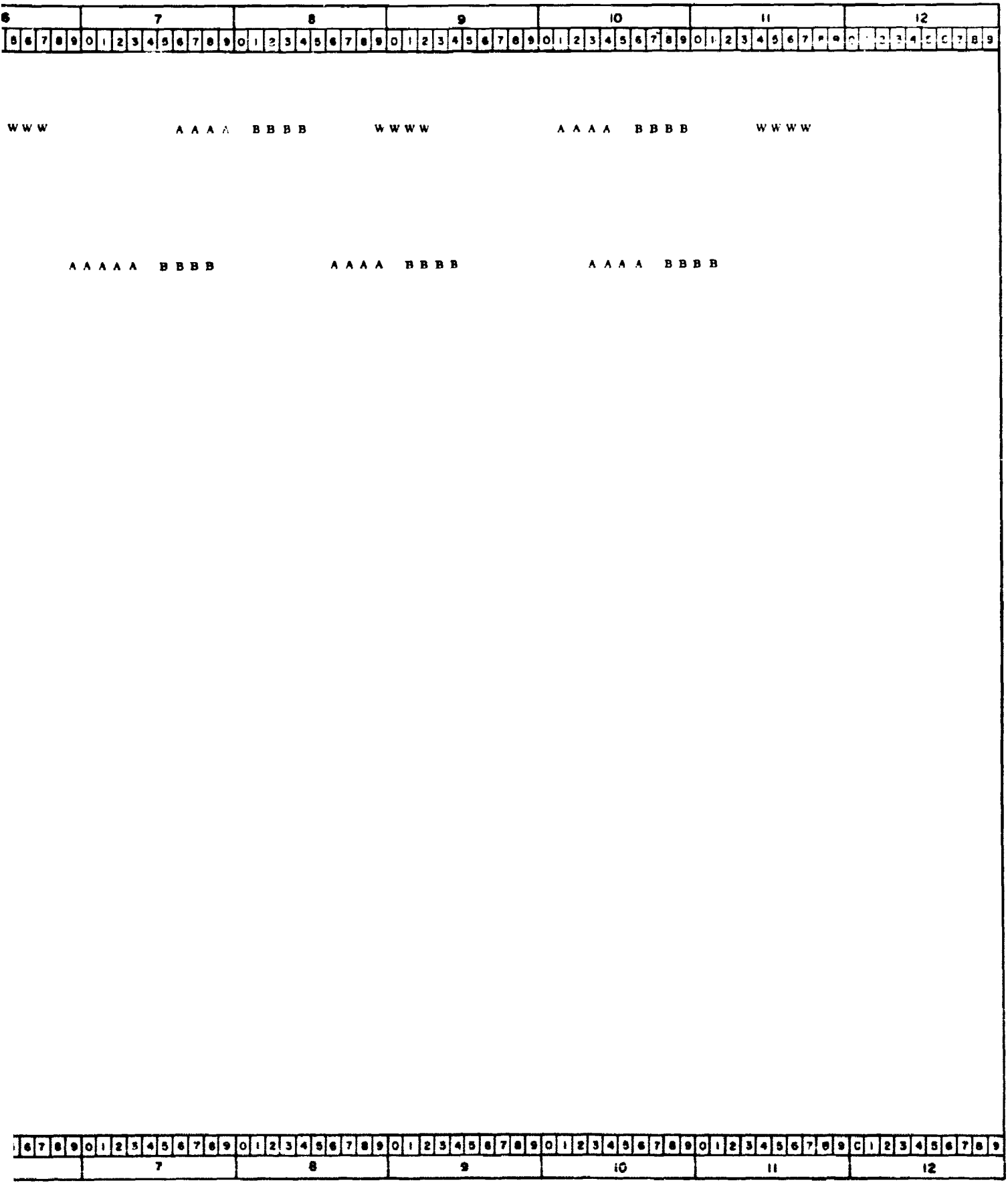

Figure 5-10. Format of Listing of Cell Identifications and Frequencies in Descending Sequence (ME006)

- Answer to first specified interview question (row identification in the matrix).
- Answer to second specified interview question (column identification in the matrix).

(3) Computer Operator Instructions

(a) Program Title and Number

PRINT CELL IDENTIFICATIONS AND FREQUENCIES IN DESCENDING SEQUENCE, ME006.

(b) Tapes

(i) Input - Sorted Interview Data Analysis Tape on Tape Drive 2.

(ii) Output - Unreadable record dump tape in Tape Drive 1.

(c) Cards - Input

(i) Date Card. Insert the Date Card in the object program deck before the first EX Card (0151 in card columns 72-75).

(ii) Inquiry Specification Cards - Sort the Inquiry Specification cards on card columns 1-4.

Insert the Inquiry Specification cards after the third EX Card (0222 in card columns 72-75) of the object program deck.

These cards will fall into the normal stacker after they are read.

(d) Sense Switches

(i) I/O and A-ON, for processing last tape reel of input file. This is the case when the input file is contained on one reel.

(ii) I/O, A, and G-ON, for processing tape reels other than the last reel when there is a multi-reel input file. When each input reel is completed, the program rewinds and unloads the reel and halts to permit the operator to mount the next reel. When the operator mounts the last reel of the file, he must turn Sense Switch G Off. He must press START to continue the program.

AUERBACH

5.13 PROGRAMMED ERROR INSTRUCTIONS

(1) Error 1 (ER01)

(a) Printout: Print contents of erroneous input card.

(b) Condition: Card and project code, "5ME", are not punched in card columns 78-80.

(c) Programmed action: The erroneous input card is not processed. The next card is read.

(d) Corrective action: Correct the erroneous Inquiry Specification Card. Enter the corrected card in a subsequent run.

(2) Error 2 (ER02)

(a) Printout: Same as for Error 1.

(b) Condition: The matrix capacity of 34 columns for two-level frequency distributions is exceeded by the input tape record in process. This condition arises because at least one invalid answer was recorded for an interview question.

(c) Programmed action: The inquiry whose responses exceed the matrix capacity is not processed and all input tape records relating to this inquiry are bypassed.

(d) Corrective action: Run the program, FORMAT ANALYZED INTERVIEW DATA AND PRINT, ME005. Create a new Sorted Interview Data Analysis Tape in accordance with the corrective action prescribed for the errors disclosed in that run.

(3) Error 3 (ER03)

(a) Printout: Same as for Error 1.

(b) Condition: The matrix capacity of 34 rows for two-level frequency distributions is exceeded by the input tape record in process. This condition arises because at least one invalid answer was recorded for an interview question.

(c) Programmed action: Same as for Error 2.

(d) Corrective action: Same as for Error 2.

SECTION VI. STATISTICAL TABLES

This Section contains the statistical tables developed during the survey. To aid in the analysis of the data, three types of tables have been used: one-way, two-way, and three-way tables.

Paragraph 6.3 contains the actual questions asked during the survey: a distribution of the answers are shown in one-way tables. It was found useful in some cases to pool the answers to several closely related categories within a question to present tabulated data that is in a more concise and comprehensible form. Where this has been done, both the pooled and unpooled distributions are shown. It is pointed out that the question numbering scheme in this Section and Appendix B (Volume I) is inconsistent with the question numbers used in the revised version of the interview guide handbook published on July 1, 1964. The numbering was changed prior to data compilation to simplify keypunching and computer operations.

Paragraph 6.4 contains the distribution of the answers to one question distributed within the answers to a second question; these are called two-way tables. In all cases, unless marked with a (u), which indicates the data is unpooled, the tables are based upon pooled data. Each two-way table is identified by a four-digit number in the upper left hand corner. The first two digits refer to the number of the first question, whose answer categories are listed vertically at the left of the table. The last two digits refer to the second question, whose answer categories are listed horizontally at the top of the tables. The reader should refer to the one-way tables in Paragraph 6.3 for the meaning of the letter-keys contained within the two-way tables. The reader is referred to Figure 6-1 for an explanation of how to interpret a two-way table.

Paragraph 6.5 contains three-way tables. These tables represent a cross distribution of the answers to three questions. The selected information is actually shown in a <u>series</u> of two-way tables, one for each category of the third question. The aforementioned comments on two-way tables are also applicable to the three-way tables. The only difference is that a separate two-way table is presented for each answer category of the third question, the answer category is identified in the title of each table in the series.

AUERBACH

0950 -(2)- TYPE OF ACTIVITY VS. USE OF DDC

(7)

Question 50 Do you use DDC (ASTIA)?

Question 9 TYPE OF ACTIVITY	9-50	Yes A	No B	BLNK	RD DF	TOTAL
Detailed Scientific or Engineering	A	(47) (2) 373 (1) 58 (3)	53 413 57			(100) (5) 786 (4) 57 (6)
Technical Evaluation	B	52 206 32	48 192 26	1 17		100 399 29
Technical Administration	C	35 55 9	63 100 14	2 3 50		100 158 11
Other	D	19 6 1	75 24 3	6 2 33		100 32 2
RD DF						1
TOTAL		47 640 100	53 729 100	6 100		100 1375 100

EXPLANATION OF THE CALL OUTS

The three entries in each cell are as follows (refer to cell 9A-50A):

(1) 373 is the cell frequency; i.e., out of 1375 responses, 373 were in category A in question 9 and also in category A in question 50.

(2) 47 indicates that this cell contains 47 percent of all the entries for that row — (373/786 x 100 = 47).

(3) 58 indicates that this cell contains 58 percent of all the entries for that column (373/640 x 100 = 58).

Similarly for row totals (refer to row 9A).

(4) 786 is the sum of the cells in that row (373 + 413 = 786).

(5) 100 is the sum of the cell row-based percentages including round-off error which appears in the column (or row) marked RD DF.

(6) This number indicates that 57 percent of the population (786/1375 x 100 = 57) answered question 9 in category A-(Detailed Scientific or Engineering).

For Value of Questions (see upper left-hand corner).

(7) Next to the question number is a one digit number set off by dashes (e.g., - 2 -). This number represents the composite evaluation which has been placed upon the reliability of the data contained in each table. A rating of - 1 - indicates that the quality of the data is excellent, whereas a rating of - 4 - indicates that the data has very marginal reliability.

Figure 6-1. Example of A Two-Way Table

6.1 SELECTION OF TABLES

All one-way tables prepared during the study are included in Paragraph 6.3. The two-way and three-way tables presented in this report have been chosen from approximately 600 tables and are those which are considered to be of primary interest.

The 600 or more tables analyzed during the survey were selected to test various hypotheses, jointly developed by AUERBACH and DOD, as to the possible relationship between the subjects of two or three questions. To aid in the development of these hypotheses, the questions were first classified into four categories; environment, response, performance, and narrative. The list of questions which fall within each category is shown in Figure 6-2. The hypotheses usually involved determining the existence of a relationship between the questions within one category to the questions within another category. In some cases cross distributions were also made within a given category. Some of these hypotheses and the results are discussed in Section III of Volume I. Supplementing and supporting Section III are the tables in Section VI, which include brief annotations based on an analysis of each table. A list of the two-way and three-way tables included in this section is given in Figure 6-3.

6.2 VALUE OF QUESTIONS

Next to the question number is a one-digit number set off by dashes (e.g., -2-). This number, which ranges from 1 through 4, represents a composite evaluation of the reliability or quality of the data contained in each two-way table. This evaluation was made by considering:

(1) The success in communicating the intent of each question to the respondent and his ability to answer it.

(2) The validity of the answers in terms of the objective of each question.

(3) The extent to which the answer categories proved to be mutually exclusive and all inclusive.

(4) The inherent subjectiveness of the question.

A value was assigned from the point of view of how well the question was implemented, i.e., how well the recorded responses accurately reflect the intent of the question; it does not reflect the value or rationale behind the question itself. The number 1 indicates that the question has a high value and the data is considered reliable and accurate. The value 4 indicates the opposite. In the case of a two- or three-way table, which may involve questions having different values, the lowest reliability or quality value has been assigned to the table.

AUERBACH

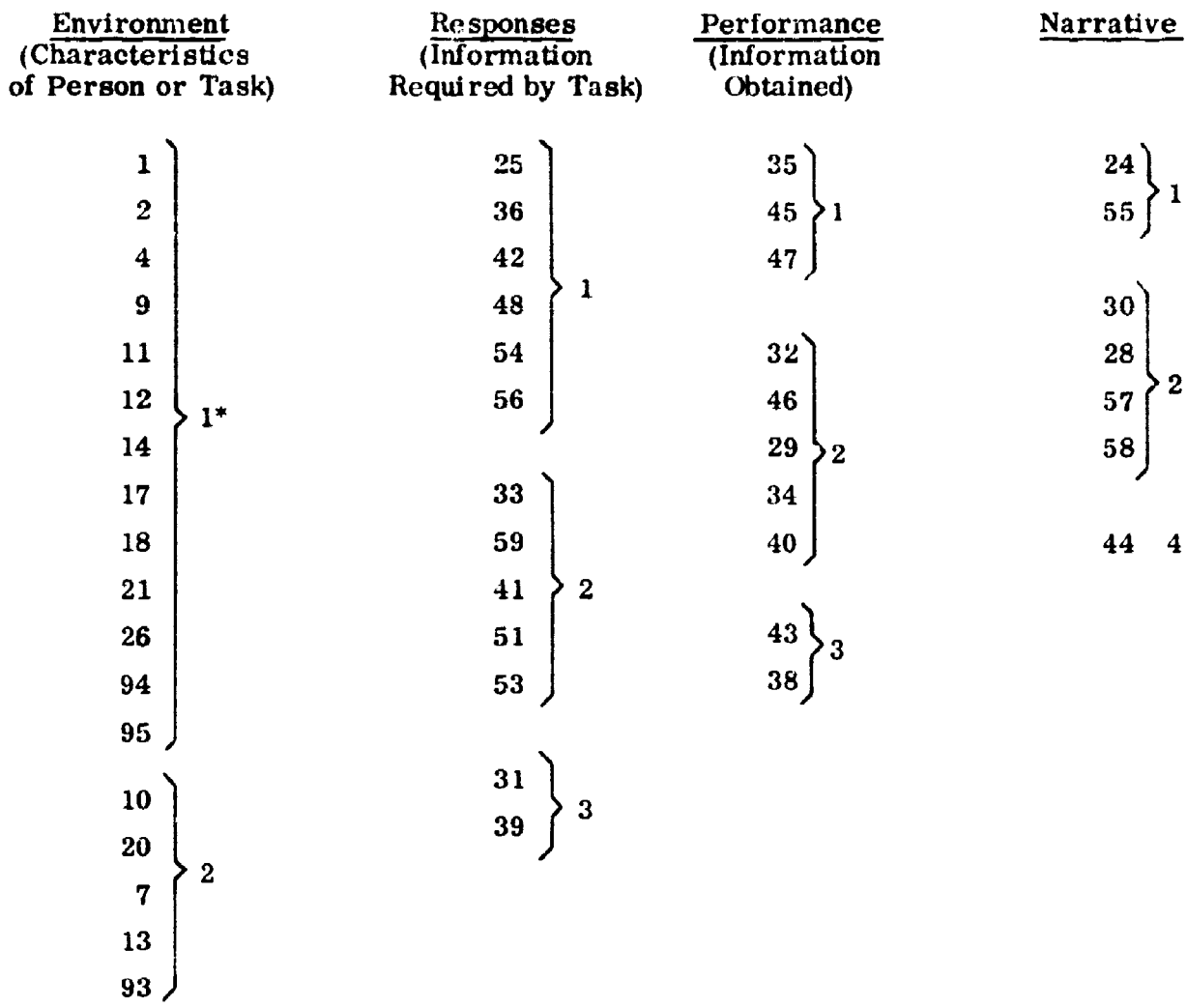

* Value rating for reliability and quality of data (see Paragraph 6.2).

Figure 6-2. Categorization of Questions

0109	- 1 -	MIL/GS RATING vs. TYPE OF ACTIVITY
0110	- 2 -	MIL/GS RATING vs. KIND OF ACTIVITY
0112	- 1 -	MIL/GS RATING vs. FIELD OF TASK
0114	- 1 -	MIL/GS RATING vs. KIND OF TASK
0125(u)	- 1 -	MIL/GS RATING vs. CLASS OF CHUNK
0148	- 1 -	MIL/GS RATING vs. POST TASK INFORMATION
0150	- 2 -	MIL/GS RATING vs. USE OF DDC
0152	- 2 -	MIL/GS RATING vs. USE OF INFORMATION CENTERS
0156	- 2 -	MIL/GS RATING vs. PRESENCE OF INFORMATION PROBLEM
0414	- 1 -	HIGHEST DEGREE AND FIELD vs. KIND OF TASK
0425(u)	- 1 -	HIGHEST DEGREE AND FIELD vs. CLASS OF CHUNK
0428	- 2 -	HIGHEST DEGREE AND FIELD vs. MEDIA
0434	- 2 -	HIGHEST DEGREE AND FIELD vs. USE OF SEARCH AIDS
0442	- 1 -	HIGHEST DEGREE AND FIELD vs. FIRST SOURCE
0450	- 2 -	HIGHEST DEGREE AND FIELD vs. USE OF DDC
0456	- 2 -	HIGHEST DEGREE AND FIELD vs. PRESENCE OF INFORMATION PROBLEM
0725	- 1 -	MOS OR JOB CODE vs. CLASS OF CHUNK
0728	- 2 -	MOS OR JOB CODE vs. MEDIA
0734	- 2 -	MOS OR JOB CODE vs. USE OF SEARCH AIDS
0742	- 1 -	MOS OR JOB CODE vs. FIRST SOURCE
0756	- 2 -	MOS OR JOB CODE vs. PRESENCE OF INFORMATION PROBLEM

Figure 6-3. List of Two-Way and Three-Way Tables
(Sheet 1 of 7)

AUERBACH®

0794	- 1 -	MOS OR JOB CODE vs. TASK OUTPUT
0910	- 2 -	TYPE OF ACTIVITY vs. KIND OF ACTIVITY
0912	- 1 -	TYPE OF ACTIVITY vs. FIELD OF TASK
0914	- 1 -	TYPE OF ACTIVITY vs. KIND OF TASK
0925	- 1 -	TYPE OF ACTIVITY vs. CLASS OF CHUNK
0942	- 1 -	TYPE OF ACTIVITY vs. FIRST SOURCE
0949	- 1 -	TYPE OF ACTIVITY vs. WHETHER TAB IS SEEN OR READ
0950	- 2 -	TYPE OF ACTIVITY vs. USE OF DDC
0952	- 2 -	TYPE OF ACTIVITY vs. USE OF INFORMATION CENTERS
0994	- 1 -	TYPE OF ACTIVITY vs. TASK OUTPUT
1012	- 2 -	KIND OF ACTIVITY vs. FIELD OF TASK
1014	- 2 -	TYPE OF ACTIVITY vs. KIND OF TASK
1025	- 2 -	KIND OF ACTIVITY vs. CLASS OF CHUNK
1034	- 2 -	KIND OF ACTIVITY vs. USE OF SEARCH AIDS
1042	- 2 -	KIND OF ACTIVITY vs. FIRST SOURCE
1048	- 2 -	KIND OF ACTIVITY vs. POST TASK INFORMATION
1049	- 2 -	KIND OF ACTIVITY vs. SEE OR READ TAB
1050	- 2 -	KIND OF ACTIVITY vs. USE OF DDC
1052	- 2 -	KIND OF ACTIVITY vs. USE OF INFORMATION CENTERS
1094	- 2 -	KIND OF ACTIVITY vs. TASK OUTPUT
1112	- 1 -	FIELD OF ACTIVITY vs. FIELD OF TASK
1134	- 2 -	FIELD OF ACTIVITY vs. USE OF SEARCH AIDS
1142	- 1 -	FIELD OF ACTIVITY vs. FIRST SOURCE
1148	- 1 -	FIELD OF ACTIVITY vs. POST TASK INFORMATION

Figure 6-3. (Sheet 2 of 7)

1149	- 2 -	FIELD OF ACTIVITY vs. USE OF TAB
1150	- 2 -	FIELD OF ACTIVITY vs. USE OF DDC
1152	- 2 -	FIELD OF ACTIVITY vs. USE OF INFORMATION CENTERS
1156	- 2 -	FIELD OF ACTIVITY vs. PRESENCE OF INFORMATION PROBLEM
1194	- 1 -	FIELD OF ACTIVITY vs. NATURE OF TASK
1214	- 1 -	FIELD OF TASK vs. KIND OF TASK
1225	- 1 -	FIELD OF TASK vs. CLASS OF CHUNK
1228	- 2 -	FIELD OF TASK vs. MEDIA
1234	- 2 -	FIELD OF TASK vs. USE OF SEARCH AIDS
1242	- 1 -	FIELD OF TASK vs. FIRST SOURCE
1248	- 1 -	FIELD OF TASK vs. POST TASK INFORMATION
1294	- 1 -	FIELD OF TASK vs. TASK OUTPUT
1421	- 1 -	KIND OF TASK vs. TASK OUTPUT
1422	- 2 -	KIND OF TASK vs. TASK OUTPUT
1423	- 2 -	KIND OF TASK vs. TASK OUTPUT
1425	- 1 -	KIND OF TASK vs. CLASS OF CHUNK
1428	- 2 -	KIND OF TASK vs. MEDIA
1433(u)	- 2 -	KIND OF TASK vs. DESIRED EXPOSURE TO INFORMATION
1436(u)	- 1 -	KIND OF TASK vs. DESIRED RETRIEVAL TIME
1439(u)	- 3 -	KIND OF TASK vs. DESIRED DEPTH OF INFORMATION
1442	- 1 -	KIND OF TASK vs. FIRST SOURCE
1448	- 1 -	KIND OF TASK vs. POST TASK INFORMATION
1494	- 1 -	KIND OF WORK vs. NATURE OF TASK
1725(u)	- 1 -	MAN-DAYS OF TASK vs. CLASS OF CHUNK

Figure 6-3. (Sheet 3 of 7)

AUERBACH

1728	- 2 -	MAN-DAYS OF TASK vs. MEDIA
1735	- 1 -	MAN-DAYS OF TASK vs. ACTUAL RETRIEVAL TIME
1736	- 1 -	MAN-DAYS OF TASK vs. DESIRED RETRIEVAL TIME
1739(u)	- 3 -	MAN-DAYS OF TASK vs. DESIRED DEPTH OF INFORMATION
1742	- 1 -	MAN-DAYS OF TASK vs. FIRST SOURCE
2025	- 2 -	TASK OUTPUT vs. CLASS OF CHUNK
2125	- 1 -	TASK OUTPUT vs. CLASS OF CHUNK
2325	- 2 -	TASK OUTPUT vs. CLASS OF CHUNK
2526	- 1 -	CLASS OF CHUNK vs. FIELD OF CHUNK
2528	- 2 -	CLASS OF CHUNK vs. MEDIA
2532	- 2 -	CLASS OF CHUNK vs. ACTUAL EXPOSURE TO INFORMATION
2533	- 2 -	CLASS OF CHUNK vs. THE DESIRED EXPOSURE TO INFORMATION
2538	- 3 -	CLASS OF CHUNK vs. ACTUAL DEPTH OF INFORMATION OBTAINED
2542	- 1 -	CLASS OF CHUNK vs. FIRST SOURCE
2542(u)	- 1 -	CLASS OF CHUNK vs. FIRST SOURCE
2545	- 1 -	CLASS OF CHUNK vs. INFORMATION OBTAINED FROM FIRST SOURCE
2547		See Table 4725(u)
2550		See Table 5025(u)
2593		See Table 9325(u)
2594		See Table 9425
2628	- 2 -	FIELD OF CHUNK vs. MEDIA
2634	- 2 -	FIELD OF CHUNK vs. USE OF SEARCH AIDS

Figure 6-3. (Sheet 4 of 7)

2642	- 1 -	FIELD OF CHUNK vs. FIRST SOURCE
2829		See Table 2928(u)
2834	- 2 -	MEDIA vs. USE OF SEARCH AIDS
2835	- 2 -	MEDIA vs. ACTUAL RETRIEVAL TIME
2839	- 3 -	MEDIA vs. DESIRED DEPTH OF INFORMATION
2928(u)	- 2 -	HABITUAL USE OF MEDIA vs. MEDIA
3233	- 2 -	ACTUAL EXPOSURE TO INFORMATION vs. DESIRED EXPOSURE TO INFORMATION
3334	- 2 -	DESIRED EXPOSURE TO INFORMATION vs. USE OF SEARCH AIDS
3336(u)	- 2 -	DESIRED EXPOSURE TO INFORMATION vs. DESIRED RETRIEVAL TIME
3339	- 3 -	DESIRED EXPOSURE TO INFORMATION vs. DESIRED DEPTH OF INFORMATION
3536	- 1 -	ACTUAL LENGTH OF RETRIEVAL TIME vs. DESIRED RETRIEVAL TIME
3542	- 1 -	ACTUAL LENGTH OF RETRIEVAL TIME vs. FIRST SOURCE
3642(u)	- 1 -	DESIRED RETRIEVAL TIME vs. FIRST SOURCE
3648		See Table 4836(u)
3650		See Table 5036(u)
3694		See Table 9436(u)
3942(u)	- 3 -	DESIRED DEPTH OF INFORMATION vs. FIRST SOURCE
3994		See Table 9439(u)
4245	- 1 -	FIRST SOURCE vs. INFORMATION OBTAINED FROM FIRST SOURCE
4247		See Table 4742(u)
4248		See Table 4842(u)

Figure 6-3. (Sheet 5 of 7)

AUERBACH

4294		See Table 9442
4725(u)	- 1 -	USE OF INFORMATION vs. CLASS OF CHUNK
4828	- 2 -	POST TASK INFORMATION vs. MEDIA
4828(u)	- 2 -	POST TASK INFORMATION vs. MEDIA
4836(u)	- 1 -	POST TASK INFORMATION vs. DESIRED RETRIEVAL TIME
4842(u)	- 1 -	POST TASK INFORMATION vs. FIRST SOURCE
4950		See Table 5048(u)
4893		See Table 9348(u)
4894	- 1 -	POST TASK INFORMATION vs. NATURE OF TASK
4895(u)	- 1 -	POST TASK INFORMATION vs. TIME SINCE TASK WAS COMPLETED
5048(u)	- 1 -	USE OF DDC vs. POST TASK INFORMATION
5052(u)	- 1 -	USE OF DDC vs. USE OF INFORMATION CENTERS
5054(u)	- 1 -	USE OF DDC vs. USE OF TRANSLATIONS
5056(u)	- 2 -	USE OF DDC vs. PRESENCE OF INFORMATION PROBLEM
5256	- 2 -	USE OF INFORMATION CENTERS vs. PRESENCE OF INFORMATION PROBLEM
9325(u)	- 2 -	LEVEL OF INTELLECT REQUIRED FOR TASK vs. CLASS OF CHUNK
9328(u)	- 2 -	LEVEL OF INTELLECT REQUIRED FOR TASK vs. MEDIA
9342(u)	- 2 -	LEVEL OF INTELLECT REQUIRED FOR TASK vs. FIRST SOURCE
9348(u)	- 2 -	LEVEL OF INTELLECT REQUIRED FOR TASK vs. POST TASK INFORMATION
9425	- 1 -	NATURE OF TASK vs. CLASS OF CHUNK
9428	- 2 -	NATURE OF TASK vs. MEDIA
9436(u)	- 1 -	NATURE OF TASK vs. DESIRED RETRIEVAL TIME
9439(u)	- 3 -	NATURE OF TASK vs. DEPTH OF INFORMATION WANTED

Figure 6-3. (Sheet 6 of 7)

9442	- 1 -	NATURE OF TASK vs. FIRST SOURCE
101428	- 2 -	KIND OF ACTIVITY vs. KIND OF TASK vs. MEDIA
102514	- 1 -	KIND OF ACTIVITY vs. CLASS OF CHUNK vs. KIND OF TASK
104214	- 1 -	KIND OF ACTIVITY vs. FIRST SOURCE vs. KIND OF TASK
171214	- 1 -	MAN-DAYS OF TASK vs. FIELD OF TASK vs. KIND OF TASK
171428	- 2 -	MAN-DAYS OF TASK vs. KIND OF TASK vs. MEDIA
251226	- 1 -	CLASS OF CHUNK vs. FIELD OF TASK vs. FIELD OF CHUNK
252628	- 2 -	CLASS OF CHUNK vs. FIELD OF CHUNK vs. MEDIA
421226	- 1 -	FIRST SOURCE vs. FIELD OF TASK vs. FIELD OF CHUNK
422526	- 1 -	FIRST SOURCE vs. CLASS OF CHUNK vs. FIELD OF CHUNK

Figure 6-3. (Sheet 7 of 7)

AUERBACH

6.3 ONE-WAY TABLES

QUESTION 1

- 1 - MILITARY OR GS RATING

POOLED

		Frequency	Percent
A.	GS05, GS07, 00E2, 00E3, 00E4, 00E5, 00E6	53	4
B.	0001, GS09	111	8
C.	0002, GS11	210	15
D.	0003, GS12	313	23
E.	0004, GS13	326	24
F.	0005, GS14	223	16
G.	0006, GS15	113	8
H.	0008, GS16, 0313	26	2
	TOTAL	1375	

UNPOOLED

	Frequency	Percent
GS05	3	-
GS06	1	-
GS07	33	2
GS09	102	7
GS11	173	13
GS12	274	20
GS13	295	21
GS14	184	13
GS15	86	6
GS16	14	1
0313	11	1
00E2	2	-
00E3	4	-
00E4	6	-
00E5	1	-
00E6	3	-
0001	9	1
0002	37	3
0003	39	3
0004	31	2
0005	39	3
0006	27	2
0008	1	-
TOTAL	1375	

Key to Rating

	AF., Army, & Marines	Navy
0001	2nd Lt.	Ensign
0002	1st Lt.	Lt. (J9)
0003	Captain	Lt.
0004	Major	Lt. Cmdr.
0005	Lt. Col.	Cmdr.
0006	Col.	Captain
0007	Brig. Gen.	Rear Adm.
0008	Maj. Gen.	Rear Adm.
00E6	Private	
00E5	Sergeant (Spl 3)	
00E6	Sergeant First Class	
9313	All PL313	

QUESTION 2

- 1 - YEAR OF BIRTH

POOLED

		Frequency	Percent
10.	Before 1910	118	9
20.	1911-1920	297	22
30.	1921-1930	488	35
40.	1931-1940	438	32
99.	After 1940	34	2
	TOTAL	1375	

UNPOOLED

		Frequency	Percent
05.	1905 and Before	30	2
10.	1906-1910	88	6
15.	1911-1915	98	7
20.	1916-1920	199	14
25.	1921-1925	271	20
30.	1926-1930	217	16
35.	1931-1935	227	17
40.	1936-1940	211	15
99.	1941 and After	34	2
	TOTAL	1375	

AUERBACH ®

QUESTION 3

- 3 - NUMBER OF TECHNICAL PERSONNEL SUPERVISED AT PRESENT

POOLED

		Frequency	Percent
10.	None	693	50
99.	1-10	552	40
Blnk.	Over 10, Blank	130	9
	TOTAL	1375	

UNPOOLED

		Frequency	Percent
00.	00	693	50
05.	1-05	431	31
10.	6-10	121	9
20.	11-20	59	4
90.	21-90	55	4
99.	Over 90	10	1
Blnk.	Blank	6	-
	TOTAL	1375	

QUESTION 4

- 1 - HIGHEST DEGREE AND FIELD

POOLED

		Frequency	Percent
A.	No degree	137	10
B.	Bachelor in Aeronautical, Chemical, Civil, Electrical, Industrial, Mechanical, Metallurgy, General, and Other Engineering	529	38
C.	Bachelor in Agriculture, Biology, Chemistry, Mathematics, Physics, and Psychology	368	27
D.	Master in Aeronautical, Chemical, Civil, Electrical, Industrial, Mechanical, Metallurgy, General, and Other Engineering	92	7
E.	Master in Agriculture, Biology, Chemistry, Mathematics, Physics, and Psychology	133	10
F.	Ph.D.in Aeronautical, Chemical, Civil, Electrical, Industrial, Mechanical, Metallurgy, General, and Other Engineering	8	1
G.	Ph.D. in Agriculture, Biology, Chemistry, Mathematics, Physics, and Psychology	93	7
H.	Medicine	15	1
	TOTAL	1375	

QUESTION 4 (CONT'D)

UNPOOLED

		Frequency	Percent
000.	No Degree	137	10
101.	B.S. - Other	62	5
102.	B.S. - Biology	13	1
103.	B.S. - Chemistry	101	7
104.	B.S. - Mathematics	78	6
105.	B.S. - Physics	114	8
107.	B.S. - General Engineering	63	5
108.	B.S. - Aerospace Engineering	42	3
111.	B.S. - Electrical Engineering	251	18
113.	B.S. - Mechanical Engineering	173	13
201.	M.S. - Other	48	3
202.	M.S. - Biology	11	1
203.	M.S. - Chemistry	22	2
204.	M.S. - Mathematics	14	1
205.	M.S. - Physics	38	3
207.	M.S. - General Engineering	23	2
208.	M.S. - Aerospace Engineering	15	1
211.	M.S. - Electrical Engineering	37	3
213.	M.S. - Mechanical Engineering	17	1
301.	Ph.D. - Other	20	1
302.	Ph.D. - Biology	15	1
303.	Ph.D. - Chemistry	32	2
304.	Ph.D. - Mathematics	2	-
305.	Ph.D. - Physics	24	2
307.	Ph.D. - General Engineering	3	-
308.	Ph.D. - Aerospace Engineering	1	-
311.	Ph.D. - Electrical Engineering	4	-
400.	M.D.	15	1
	TOTAL	1375	

QUESTION 5

- 1 - YEAR OBTAINED HIGHEST DEGREE

POOLED

		Frequency	Percent
45.	Before 1945	378	27
55.	1945-1954	429	31
99.	After 1954	568	41
	TOTAL	1375	

AUERBACH

QUESTION 5 (CONT'D)

UNPOOLED

	Frequency	Percent
1925 and Before	118	9
1926 - 1930	18	1
1931 - 1935	66	5
1936 - 1940	89	6
1941 - 1945	87	6
1946 - 1950	198	14
1951 - 1955	231	17
1956 - 1960	297	22
Blank or None	271	20
TOTAL	1375	

QUESTION 7

- 1 - MOS OR JOB CODE

POOLED

		Frequency	Percent
A.	Biology, Medical Officer	48	3
B.	General Engineering, Civil, Electronic, Aerospace, Marine, Industrial, and Mechanical Engineering	697	51
C.	General Physical Sciences, Physics, Chemistry, Metallurgy, and Meteorology	301	22
D.	Mathematics	82	6
E.	Unknown, Geography, Psychology, Library and Archives, R&D Coordinator (Army), Navigator, and Photographer	247	18
	TOTAL	1375	

QUESTION 7 (CONT'D)

UNPOOLED

		Frequency	Percent
0000	Unknown	183	13
0150	Geography	14	1
0180	Psychology	13	1
0401	Biology	36	3
0602	Medical Officer	12	1
0801	General Engineering	111	8
0810	Civil Engineering	17	1
0830	Mechanical Engineering	153	11
0855	Electrical Engineering	305	22
0861	Aerospace Engineering	81	6
0870	Marine Engineering	15	1
0896	Industrial Engineering	15	1
1301	General Physical Sciences	38	3
1310	Physics	140	10
1320	Chemistry	95	7
1321	Metallurgy	24	2
1340	Meteorology	4	-
1400	Library and Archives	10	1
1520	Mathematics	82	6
2167	R&D Coordinator (Army)	20	1
8558	Navigator and Photographer	7	1
	TOTAL	1375	

QUESTION 8

- 3 - HOW LONG HAVE YOU BEEN DOING THIS TYPE OF WORK?

	Frequency	Percent
1 Year and Under	219	16
1 - 5 Years	555	40
Over 5 Years	601	44
TOTAL	1375	

AUERBACH ®

QUESTION 9

- 1 - TYPE OF ACTIVITY

		Frequency	Percent
A.	Detailed Scientific or Engineering	786	57
B.	Technical Evaluation	399	29
C.	Technical Administration	158	11
D.	Other (specify)	32	2
	TOTAL	1375	

QUESTION 10

- 2 - KIND OF ACTIVITY

POOLED

		Frequency	Percent
A.	Research	210	15
B.	Exploratory Development, Advanced Development, Engineering Development, and Operational Systems Development	671	49
C.	Reliability - Quality Control	47	3
D.	R&D Support	318	23
E.	Other, Blank	129	9
	TOTAL	1375	

UNPOOLED

		Frequency	Percent
A.	Research	210	15
B.	Exploratory Development	161	12
C.	Advanced Development	131	10
D.	Engineering Development	165	12
E.	Operational System Development	214	16
F.	Reliability & Quality Control	47	3
G.	R&D Support	318	23
H.	Other (Specify)	120	9
Blnk.	Blank	9	1
	TOTAL	1375	

QUESTION 11

- 1 - FIELD OF ACTIVITY

POOLED

		Frequency	Percent
01	Aircraft and flight equipment	96	7
02	Astronomy, geophysics and geography	34	2
03	Chemical warfare equipment and materials, chemistry	53	4
05	Communications electronics	200	15
06	Detection	64	5
10	Fuels and combustion, propulsion systems	42	3
11	Ground transportation equipment, transportation	15	1
12	Guided missiles	117	9
14	Materials (non-metallic), metallurgy	46	3
15	Mathematics	31	2
16	Medical sciences	82	6
22	Ordnance	131	10
25	Physics, fluid mechanics, and nuclear physics	81	6
26	Production and management	27	2
30	Research and research equipment	184	13
31	Ships and marine equipment	48	3
34	Electrical equipment, installations and construction, navigation, nuclear propulsion, photography, psychology and human engineering, and quartermaster equipment	77	6
36	Military sciences, personnel training, miscellaneous arts and sciences, blank	47	3
	TOTAL	1375	

AUERBACH ®

QUESTION 11 (CONT'D)

UNPOOLED

		Frequency	Percent
01	Aircraft and flight equipment	96	7
02	Astronomy, geophysics and geography	34	2
03	Chemical warfare equipment and materials	21	2
04	Chemistry	32	2
05	Communications	68	5
06	Detection	64	5
07	Electrical equipment	12	1
08	Electronics and electronic equipment	132	10
09	Fluid mechanics	12	1
10	Fuels and combustion	17	1
11	Ground transportation equipment	13	1
12	Guided missiles	117	9
13	Installations and construction	16	1
14	Materials (non-metallic)	30	2
15	Mathematics	31	2
16	Medical sciences	82	6
17	Metallurgy	16	1
18	Military sciences and operations	20	1
19	Navigation	18	1
20	Nuclear physics and nuclear chemistry	29	2
21	Nuclear propulsion	2	-
22	Ordnance	131	10
23	Personnel and training	10	1
24	Photography and other reproduction processes	6	-
25	Physics	40	3
26	Production and management	27	2
27	Propulsion systems	25	2
28	Psychology and human engineering	15	1
29	Quartermaster equipment and supplies	8	1
30	Research and research equipment	184	13
31	Ships and marine equipment	48	3
32	Miscellaneous arts and sciences	8	1
33	Transportation	2	-
Blnk.	Blank	9	1
	TOTAL	1375	

QUESTION 12

- 1 - FIELD OF TASK

POOLED

		Frequency	Percent
01	Aircraft and flight equipment	77	6
02	Astronomy, geophysics and geography	26	2
03	Chemical warfare equipment and materials, chemistry	42	3
05	Communications, electronics	203	15
06	Detection	60	4
10	Fuels and combustion, propulsion system	44	3
11	Ground transportation equipment, transportation	9	1
12	Guided missiles	101	7
14	Materials (non-metallic), metallurgy	49	4
15	Mathematics	27	2
16	Medical sciences	80	6
22	Ordnance	123	9
25	Physics, fluid mechanics, and nuclear physics	85	6
26	Production and management	30	2
30	Research and research equipment	215	16
31	Ships and marine equipment	38	3
34	Electronic equipment, installations and construction, navigation, nuclear propulsion, photography, psychology and human engineering, and quartermaster equipment.	96	7
36	Military sciences, personnel training, miscellaneous arts and sciences, blank	70	5
	TOTAL	1375	

AUERBACH

QUESTION 12 (CONT'D)

UNPOOLED

		Frequency	Percent
01	Aircraft and flight equipment	77	6
02	Astronomy, geophysics and geography	26	2
03	Chemical warfare equipment and materials	16	1
04	Chemistry	26	2
05	Communications	70	5
06	Detection	60	4
07	Electrical equipment	21	2
08	Electronics and electronic equipment	133	10
09	Fluid mechanics	14	1
10	Fuels and combustion	21	2
11	Ground transportation equipment	6	-
12	Guided missiles	101	7
13	Installations and construction	21	2
14	Materials (non-metallic)	33	2
15	Mathematics	27	2
16	Medical sciences	80	6
17	Metallurgy	16	1
18	Military sciences and operations	22	2
19	Navigation	19	1
20	Nuclear physics and nuclear chemistry	29	2
21	Nuclear propulsion	1	-
22	Ordnance	123	9
23	Personnel and training	10	1
24	Photography and other reproduction processes	12	1
25	Physics	42	3
26	Production and management	30	2
27	Propulsion systems	23	2
28	Psychology and human engineering	13	1
29	Quartermaster equipment and supplies	9	1
30	Research and research equipment	215	16
31	Ships and marine equipment	38	3
32	Miscellaneous arts and sciences	11	1
33	Transportation	3	-
Blnk.	Blank	27	2
	TOTAL	1375	

QUESTION 14

- 1 - KIND OF TASK

POOLED

		Frequency	Percent
A.	Research	176	13
B.	Exploratory development, advanced development, engineering development, and operational systems development	683	50
F.	Reliability and quality control	62	5
G.	R&D support	357	26
H.	Other, blank	97	7
	TOTAL	1375	

UNPOOLED

		Frequency	Percent
A.	Research	176	13
B.	Exploratory development	153	11
C.	Advanced development	113	8
D.	Engineering development	174	13
E.	Operational development	243	18
F.	Reliability and quality control	62	5
G.	R&D support	357	26
H.	Other (specify)	60	4
Blnk.	Blank	37	3
	TOTAL	1375	

AUERBACH

QUESTION 15

- 4 - WAS THE TASK ASSIGNED ?

		Frequency	Percent
A.	Yes	709	52
B.	No	633	46
Blnk.	Blank	33	2
	TOTAL	1375	

QUESTION 16

- 4 - IF THE TASK WAS NOT ASSIGNED, HOW DID IT ORIGINATE ?

		Frequency	Percent
A.	Self-generated	507	37
B.	Joint decision	107	8
C.	Other	22	2
Blnk.	Blank	739	54
	TOTAL	1375	

QUESTION 17

- 1 - MAN-DAYS OF TASK

		Frequency	Percent
005.	1 to 5 days	735	53
022.	6 to 22 days	412	30
132.	23 to 132 days	195	14
999.	over 132 days	33	2
	TOTAL	1375	

QUESTION 18

- 1 - ON THE AVERAGE, WHAT PERCENT OF YOUR OWN PERSONAL TIME WAS DEVOTED TO THE TASK ?

		Frequency	Percent
A.	under 20 percent	347	25
B.	21 - 40 percent	277	20
C.	41 - 60 percent	268	19
D.	61 - 80 percent	211	15
E.	81 - 100 percent	243	18
Blnk.	Blank	29	2
	TOTAL	1375	

QUESTION 20

- 2 - WAS THE MAJOR OUTPUT OF THE TASK

		Frequency	Percent
A.	A finding	573	42
B.	A recommendation	500	36
C.	A decision	251	18
Blnk.	Blank	51	4
	TOTAL	1375	

QUESTION 21

- 1 - WAS THE MAJOR OUTPUT OF THE TASK

		Frequency	Percent
A.	Oral	286	21
B.	Written	935	68
C.	Other	124	9
Blnk.	Blank	30	2
	TOTAL	1375	

QUESTION 22

- 2 - WAS THE MAJOR OUTPUT OF THE TASK

		Frequency	Percent
A.	Formal	800	58
B.	Informal	532	39
Blnk.	Blank	43	3
	TOTAL	1375	

QUESTION 23

- 2 - WAS THE MAJOR OUTPUT DIRECTED

		Frequency	Percent
A.	To or within DOD	1154	84
B.	Outside DOD	187	14
Blnk.	Blank	34	2
	TOTAL	1375	

AUERBACH®

QUESTION 25

- 1 - CLASS OF CHUNK

POOLED

		Frequency	Percent
A.	Concepts	379	8
B.	Cost and funding	143	3
C.	Design techniques, experimental processes, production processes and procedures, utilization, and test processes and procedures	940	20
E.	Mathematical aids and formulae	269	6
F.	Performance and characteristics, specifications	1967	42
H.	Raw data	215	5
J.	Technical status	517	11
M.	Other	257	5
	TOTAL	4687	

UNPOOLED

		Frequency	Percent
A.	Concepts	379	8
B.	Cost and funding	143	3
C.	Design techniques	191	4
D.	Experimental processes	134	3
E.	Mathematical aids and formulae	269	6
F.	Performance and characteristics	1277	27
G.	Production processes and procedures	75	2
H.	Raw data	215	5
I.	Specifications	690	15
J.	Technical status	517	11
K.	Test processes and procedures	192	4
L.	Utilization	348	7
M.	Other	257	5
	TOTAL	4687	

QUESTION 26

- 1 - FIELD OF CHUNK

POOLED

		Frequency	Percent
01	Aircraft and flight equipment	232	5
02	Astronomy, geophysics, and geography	73	2
03	Chemical warfare equipment and materials, chemistry	173	4
05	Communications, electronics	762	16
06	Detection	165	4
10	Fuels and combustion, propulsion system	131	3
11	Ground transportation equipment, transportation	34	1
12	Guided missiles	284	6
14	Materials (non-metallic), metallurgy	270	6
15	Mathematics	197	4
16	Medical sciences	203	4
22	Ordnance	304	6
25	Physics, fluid mechanics, and nuclear physics	324	7
26	Production and management	156	3
30	Research and research equipment	801	17
31	Ships and marine equipment	92	2
34	Electrical equipment, installations and construction, navigation, nuclear propulsion, photography, psychology and human engineering, and quartermaster equipment	319	7
36	Military sciences, personnel training, miscellaneous arts and sciences, blank	167	4
	TOTAL	4687	

AUERBACH

QUESTION 26 (CONT'D)

UNPOOLED

		Frequency	Percent
01	Aircraft and flight equipment	233	5
02	Astronomy, geophysics and geography	73	2
03	Chemical warfare equipment and materials	46	1
04	Chemistry	127	3
05	Communications	200	4
06	Detection	165	4
07	Electrical equipment	100	2
08	Electronics and electronic equipment	562	12
09	Fluid mechanics	71	2
10	Fuels and combustion	68	1
11	Ground transportation equipment	21	-
12	Guided missiles	284	6
13	Installations and construction	60	1
14	Materials (non-metallic)	161	3
15	Mathematics	197	4
16	Medical sciences	202	4
17	Metallurgy	109	2
18	Military sciences and operations	90	2
19	Navigation	43	1
20	Nuclear physics and nuclear chemistry	89	2
21	Nuclear propulsion	10	-
22	Ordnance	304	6
23	Personnel and training	36	1
24	Photography and other reproduction processes	55	1
25	Physics	164	3
26	Production and management	156	3
27	Propulsion systems	63	1
28	Psychology and human engineering	29	1
29	Quartermaster equipment and supplies	22	-
30	Research and research equipment	801	17
31	Ships and marine equipment	92	2
32	Miscellaneous arts and sciences	26	1
33	Transportation	13	-
Blnk.	Blank	15	-
	TOTAL	4687	

QUESTION 28

- 2 - MEDIA*

POOLED

		Frequency	Percent
A.	Brochures, catalogs, standards and codes, drawings, schematics, parts lists, and system specification documents (QMR, TDP, etc.)	872	11
B.	Oral contacts with manufacturer, oral contacts - all other; meetings and symposia	2276	29
C.	Live demonstration, physical measurement or experiment	260	3
D.	Directives, handbooks, and manuals	579	8
K.	Correspondence, memos, TWX, personal notes, personal logs, and personal files	634	8
N.	Newsletters and other mass media	37	0
R.	Reports and proposals	1289	17
S.	Texts	446	6
T.	Photographs, maps and films	80	1
P.	Pre-prints, reprints, and journals	379	5
V.	Previous knowledge	830	11
W.	Computer printout	82	1
Z.	Other	46	1
	TOTAL	7790	

*The term media refers to the vehicle by which the information was conveyed or transmitted to user.

AUERBACH ®

QUESTION 28 (CONT'D)

UNPOOLED

		Frequency	Percent
A.	Brochures	150	2
B.	Catalogs	104	1
C.	Standards and codes	232	3
D.	Drawings, schematics	248	3
E.	Parts lists	19	-
F.	System specification document (QMR, TDP, etc.)	119	2
G.	Oral contacts with manufacturer	341	4
H.	Oral contacts - all other	1855	24
I.	Meetings and symposia	80	1
J.	Directives	39	1
K.	Correspondence, memos, TWX	445	6
L.	Handbooks	226	3
M.	Manuals	314	4
N.	Newletters and other mass media	37	-
O.	Live demonstration	105	1
P.	Pre-prints and reprints	49	-
Q.	Proposals	59	1
R.	Reports	1230	16
S.	Texts	446	6
T.	Photographs, maps and films	60	1
U.	Journals	330	4
V.	Previous knowledge	830	11
W.	Computer printout	82	1
X.	Personal notes, personal logs, and personal files	189	2
Y.	Physical measurement or experiment	155	2
Z.	Other	46	1
	TOTAL	7790	

QUESTION 29

- DO YOU HABITUALLY USE THESE MEDIA OR PERSONS TO OBTAIN INFORMATION?

		Frequency	Percent
A.	Yes	3735	80
B.	No	255	5
C.	Information never found	20	-
Blnk.	Blank	677	14
	TOTAL	4687	

QUESTION 31

- 3 - AT THE TIME THAT YOU OBTAINED THIS CHUNK OF INFORMATION, WOULD YOU HAVE PREFERRED THAT IT BE PRESENTED TO YOU IN ANY OTHER MEDIA OR IN ANY OTHER PHYSICAL ARRANGEMENT?

POOLED

		Frequency	Percent
A.	No, no preference	2153	46
B.	Book bulletin, article and report	1027	22
C.	Informal, oral — formal, oral briefing	410	9
E.	Live demonstration, microfilm or microfiche, slides or motion pictures, correspondence and memos, other (specify)	1097	23
	TOTAL	4687	

UNPOOLED

		Frequency	Percent
A.	No, no preference	2153	46
B.	Book, bulletin, article, report	1027	22
C.	Informal, oral	329	7
D.	Formal, oral briefing	81	2
E.	Live demonstration	43	1
F.	Microfilm or microfiche	20	-
G.	Slides or motion pictures	12	-
H.	Correspondence and memos	107	2
I.	Other (specify)	121	3
Blnk.	Blank	794	17
	TOTAL	4687	

QUESTION 3

- 2 - ACTUAL EXPOSURE TO INFORMATION

		Frequency	Percent
A.	One item of available material which contains the information	1516	32
B.	A sampling	1599	34
C.	All the available material	752	16
D.	Nothing	36	1
Blnk.	Blank	784	17
	TOTAL	4687	

QUESTION 33

- 2 - DESIRED EXPOSURE TO INFORMATION

		Frequency	Percent
A.	One item of material	1611	34
B.	A sampling	1240	27
C.	All the available material	1050	22
Blnk.	Blank	786	17
	TOTAL	4687	

QUESTION 34

- 2 - SINCE YOU WANTED TO SEE A LOT OF INFORMATION, DO YOU THINK SEARCH AIDS WOULD BE USEFUL?

POOLED

		Frequency	Percent
A.	No, wanted to review all the material (explain)	263	6
B.	Title listings, abstracts, or both	466	10
F.	Already used either or both	155	3
X.	Blank	3803	81
	TOTAL	4687	

QUESTION 34 (CONT'D)

UNPOOLED

		Frequency	Percent
A.	No, wanted to review all the material (explain)	263	6
B.	Title listings	84	2
C.	Abstracts	64	1
D.	Both title listings and abstracts	311	7
E.	No preference	7	-
F.	Already used either or both	155	3
Blnk.	Blank	3803	81
	TOTAL	4687	

QUESTION 35

ACTUAL RETRIEVAL TIME

POOLED

		Frequency	Percent
A.	No or not applicable	351	7
B.	Less than one day	1676	36
C.	Less than one week	735	16
D.	Less than one month, less than three months, more than three months	895	19
G.	Received with task assignment	228	5
X.	Blank	802	17
	TOTAL	4687	

UNPOOLED

		Frequency	Percent
A.	No or not applicable	351	7
B.	Less than one day	1676	36
C.	Less than one week	735	16
D.	Less than one month	492	10
E.	Less than three months	217	5
F.	More than three months	186	4
G.	Received with task assignment	228	5
Blnk.	Blank	802	17
	TOTAL	4687	

AUERBACH

QUESTION 36

DESIRED RETRIEVAL TIME

POOLED

		Frequency	Percent
A.	No or not applicable	738	16
B.	Less than one day	617	13
C.	Less than one week	998	21
D.	Less than one month, less than three months, more than three months	1315	28
G.	Received with task assignment	212	5
X.	Blank	807	17
	TOTAL	4687	

UNPOOLED

		Frequency	Percent
A.	No or not applicable	738	16
B.	Less than one day	617	13
C.	Less than one week	998	21
D.	Less than one month	829	18
E.	Less than three months	300	6
F.	Over three months	186	4
G.	Received with task assignment	212	5
Blnk.	Blank	807	17
	TOTAL	4687	

QUESTION 38

DEPTH OF INFORMATION OBTAINED

		Frequency	Percent
A.	Once over lightly of the subject	859	18
B.	Detailed analysis	1994	43
C.	Specific answer	1002	21
D.	Nothing	42	1
Blnk.	Blank	790	17
	TOTAL	4687	

QUESTION 39

- 2 - DEPTH OF INFORMATION WANTED

		Frequency	Percent
A.	Once over lightly of the subject	700	15
B.	Detailed analysis	2152	46
C.	Specific answer	1043	22
Blnk.	Blank	792	
	TOTAL	4687	

QUESTION 40

- 3 - ACTUAL PHYSICAL ARRANGEMENT OF INFORMATION

POOLED

		Frequency	Percent
A.	Information not obtained	27	1
B.	Narrative text, tables or lists, graphical-diagrams, drawings, schematics, flow charts; graphs, maps, photos, graphical and text, and graphical and lists.	1151	34
I.	Other (specify)	1706	36
X.	Blank	1383	30
	TOTAL	4687	

UNPOOLED

		Frequency	Percent
A.	Information not obtained	27	1
B.	Narrative text	638	14
C.	Tables or lists	385	8
D.	Graphical diagrams, drawings, schematics, flow charts, graphs, maps	204	4
E.	Photos	7	-
F.	Graphical and text	263	6
G.	Photos and text	40	1
H.	Graphical and lists	34	1
I.	Other combinations (explain)	1466	31
J.	Other (specify)	240	5
Blnk.	Blank	1383	30
	TOTAL	4687	

QUESTION 41

- 3 - DESIRED PHYSICAL ARRANGEMENT OF INFORMATION

POOLED

		Frequency	Percent
A.	Information not obtained	93	2
B.	Narrative text, tables or lists, graphical diagrams, drawings, schematics, flow charts, graphs, maps, photos, graphical and text, graphical and lists	1662	35
I.	Other combinations (explain)	1806	39
Blnk.	Blank	1126	24
	TOTAL	4687	

UNPOOLED

		Frequency	Percent
A.	Information not obtained	93	2
B.	Narrative text	685	15
C.	Tables or lists	402	9
D.	Graphical diagrams, drawings, schematics, flow charts, graphs, maps	211	5
E.	Photos	5	-
F.	Graphical and text	282	6
G.	Photos and text	38	1
H.	Graphical and lists	39	1
I.	Other combinations (explain)	1112	24
J.	Other (specify)	694	15
Blnk.	Blank	1126	24
	TOTAL	4687	

QUESTION 42

- 1 - FIRST SOURCE

POOLED

		Frequency	Percent
A.	Received with task assignment	496	11
B.	Supervisor (if given by supervisor after assignment), assignment to subordinate	268	6
E.	Consultants (outside), colleague	1027	22
F.	Librarian or technical researcher, library (search by self)	243	5
H.	Department bookcase or files	608	13
I.	Own collection	820	17
J.	Information or data centers	19	0
K.	Manufacturer or supplier	215	5
L.	Blank	991	21
	TOTAL	4687	

UNPOOLED

		Frequency	Percent
A.	Received with task assignment	496	11
B.	Supervisor (if given by supervisor after assignment)	93	2
C.	Assignment to subordinate	175	4
D.	Consultants (outside)	55	1
E.	Colleague	972	21
F.	Librarian or technical researcher	37	1
G.	Library (search by self)	206	4
H.	Department bookcase or files	608	13
I.	Own collection	820	17
J.	Information or data centers	19	-
K.	From manufacturer or supplier	215	5
L.	Other (specify)	205	4
Blnk.	Blank	786	17
	TOTAL	4687	

AUERBACH

QUESTION 43

- 3 - WHAT WAS THE REASON FIRST SOURCE WAS USED?

POOLED

		Frequency	Percent
A.	Received with task assignment	534	11
B.	Most authoritative, only source known, availability, found helpful previously	1989	42
E.	Recalled from mind that specific chunk was available from this source	1119	24
G.	Blank	1045	22
	TOTAL	4687	

UNPOOLED

		Frequency	Percent
A.	Received with task assignment	534	11
B.	Most authoritative	806	17
C.	Only source known	180	4
D.	Availability (handy), easy to use	702	15
E.	Recalled from mind that specific chunk was available from this source	1119	24
F.	Found helpful previously	301	6
G.	Other (specify)	263	6
Blnk.	Blank	782	17
	TOTAL	4687	

QUESTION 45

- 1 - WHAT INFORMATION WAS OBTAINED FROM FIRST SOURCE?

		Frequency	Percent
A.	All the information	1821	39
B.	Part of the information	1688	36
C.	Reference to further information	307	7
D.	Nothing	86	2
Blnk.	Blank	785	17
	TOTAL	4687	

QUESTION 46

- 2 - NEED FOR INFORMATION CHUNK

		Frequency	Percent
A.	Absolutely essential	3064	65
B.	Could have completed task without it	619	13
Blnk.	Blank	1004	21
	TOTAL	4687	

QUESTION 47

- 1 - USE OF INFORMATION CHUNK

		Frequency	Percent
A.	Directly in the task	3142	67
B.	As background information	730	16
C.	As a lead to other information	7	-
D.	Not at all	23	-
E.	Other (specify)	12	-
Blnk.	Blank	773	16
	TOTAL	4687	

QUESTION 48

- 1 - DID YOU FIND POST TASK INFORMATION?

		Frequency	Percent
A.	Yes (explain)	173	13
B.	No	1148	83
Blnk.	Blank	54	4
	TOTAL	1375	

AUERBACH

QUESTION 49

- 2 - HOW OFTEN DO YOU SEE OR READ TAB?

POOLED

		Frequency	Percent
A.	Almost every issue	280	20
B.	Once every two or three months; no more than once every six months	304	22
D.	Never read TAB; does not know of TAB; Blank	791	58
	TOTAL	1375	

UNPOOLED

		Frequency	Percent
A.	Almost every issue	280	20
B.	Once every two or three months	122	9
C.	No more than once every six months	182	13
D.	Never read TAB	248	18
F.	Does not know of TAB	531	39
Blnk.	Blank	12	1
	TOTAL	1375	

QUESTION 50

- 2 - DO YOU USE DDC?

		Frequency	Percent
A.	Yes (skip to question 52)	640	47
B.	No	729	53
Blnk.	Blank	6	-
	TOTAL	1375	

QUESTION 51

- 3 - REASON DDC NOT USED

POOLED

		Frequency	Percent
A.	Does not know of DDC	286	21
B.	Physical location, red tape, security, time, poor previous results	43	3
F.	Not relevant	169	12
H.	Other (explain)	232	17
X.	Blank	645	47
	TOTAL	1375	

UNPOOLED

		Frequency	Percent
A.	Does not know of DDC	286	21
B.	Physical location	1	-
C.	Red tape	5	-
D.	Security	2	-
E.	Time (too long to obtain information)	30	2
F.	Not relevant	169	12
G.	Poor previous results	5	-
H.	Other (explain)	232	17
Blnk.	Blank	645	47
	TOTAL	1375	

QUESTION 52

- 2 - DO YOU USE SPECIALIZED INFORMATION CENTERS ?

		Frequency	Percent
A.	Yes (record names) skip to question 54	750	55
B.	No	604	44
Blnk.	Blank	21	2
	TOTAL	1375	

AUERBACH ®

QUESTION 53

- 3 - REASON INFORMATION CENTERS ARE NOT USED

POOLED

		Frequency	Percent
A.	Do not know of such centers	255	19
B.	Physical location, red tape, security, time, poor previous results	15	1
F.	Not relevant	184	13
H.	Other (explain)	150	11
X.	Blank	771	56
	TOTAL	1375	

UNPOOLED

		Frequency	Percent
A.	Do not know of such centers	255	19
B.	Physical location	-	-
C.	Red tape	1	-
D.	Security	-	-
E.	Time (too long to obtain information)	13	1
F.	Not relevant	184	13
G.	Poor previous results	1	-
H.	Other (explain)	150	11
Blnk.	Blank	771	56
	TOTAL	1375	

QUESTION 54

- 1 - USE OF TRANSLATIONS

		Frequency	Percent
A.	Yes	764	56
B.	No	603	44
Blnk.	Blank	8	
	TOTAL	1375	

QUESTION 56

- 2 - DID YOU HAVE ANY SERIOUS TROUBLE OBTAINING OR LOCATING TECHNICAL INFORMATION IN ORDER TO PERFORM OR CONCLUDE THESE TASKS?

		Frequency	Percent
A.	Yes	370	27
B.	No	921	67
Blnk.	Blank	84	6
	TOTAL	1375	

QUESTION 59

- 2 - NEED FOR EXTERNAL INFORMATION

		Frequency	Percent
A.	Has a very large need for external technical information	443	32
B.	Has moderate need for external	597	43
C.	Has an insignificant need for external technical information	330	24
Blnk.	Blank	5	-
	TOTAL	1375	

QUESTION 93

- 2 - INTELLECTUAL REQUIREMENTS OF TASK

Categories 1 through 4 represent an evaluation as to how well the specific task would fit into a man-machine relationship in the sense that the task might have been programmed and accomplished in some automated fashion. One of the key factors in making this evaluation is to determine the professional knowledge or intellect needed to perform the task.

		Frequency	Percent
1.	Possibly mechanical — low intellect	50	4
2.	Difficult to mechanize — some intellect	430	31
3.	Very difficult to mechanize — considerable intellect required	767	56
4.	Impossible to mechanize — great intellect required	70	5
Blnk.	Blank	58	4
	TOTAL	1375	

QUESTION 94

- 1 - NATURE OF TASK OUTPUT

		Frequency	Percent
A.	Concepts	46	3
B.	Costs and funding, administrative action	137	10
C.	Designs or design techniques	211	15
D.	Experimental processes and procedures	63	5
E.	Mathematical aids and formulae, computer programs	94	7
F.	Performance and characteristics	239	17
G.	Production processes and procedures	22	2
H.	Raw data	34	2
I.	Specifications	68	5
J.	Technical status	63	5
K.	Test processes and procedures	66	5
L.	Utilization	23	2
M.	Other, blank	75	5
N.	Evaluation	234	17
	TOTAL	1375	

QUESTION 95

- 1 - TIME SINCE TASK WAS COMPLETED

		Frequency	Percent
007.	1 week	291	21
014.	2 weeks	89	6
030.	1 month	164	12
060.	2 months	95	7
120.	4 months	35	3
999.	Over 4 months	17	1
Blnk.	Blank	684	50
	TOTAL	1375	

6.4 TWO-WAY TABLES

0109 - 1 - MIL/GS RATING vs. TYPE OF ACTIVITY

Using the chi squared test with the null hypothesis that a person's rating is independent of his type of activity, it was found that at the five percent confidence level the hypothesis should be rejected. The table shows that people of a GS13, 0004 rating and below tend to be of a detailed scientific and engineering type, whereas above this they tend to be either of a technical evaluation or technical administration type.

1- 9	A	B	C	D	RD DF	TOTAL
A	64	13	2	21		100
	34	7	1	11		53
	4	2	1	34		4
B	80	17	1	2		100
	89	19	1	2		111
	11	5	1	6		8
C	80	14	4	2		100
	168	29	9	4		210
	21	7	6	13		15
D	72	23	4	1		100
	224	73	12	4		313
	28	18	8	13		23
E	53	37	9	1		100
	174	119	30	3		326
	22	30	19	9		24
F	29	45	24	2		100
	65	100	53	5		223
	8	25	34	16		16
G	18	40	40	3	- 1	100
	20	45	45	3		113
	3	11	28	9		8
H	46	27	27			100
	12	7	7			26
	2	2	4			2
RD DF	1		- 1			
TOTAL	57	29	11	2	1	100
	786	399	158	32		1375
	100	100	100	100		100

0110 - 2 - MIL/GS RATING vs. KIND OF ACTIVITY

No outstanding features were observed from the data presented in this table.

1-10	A	B	C	D	E	RD DF	TOTAL
A	13	32	9	45		1	100
	7	17	5	24			53
	3	3	11	8			4
B	18	50	7	17	8		100
	20	55	8	19	9		111
	10	8	17	6	7		8
C	18	48	5	22	7		100
	38	101	10	47	14		210
	18	15	21	15	11		15
D	16	51	3	25	6	- 1	100
	49	159	10	77	18		313
	23	24	21	24	14		23
E	14	53	2	21	10		100
	47	174	6	68	31		326
	22	26	13	21	24		24
F	11	46	3	24	17	- 1	100
	25	102	6	53	37		223
	12	15	13	17	29		16
G	11	49	1	24	16	- 1	100
	12	55	1	27	18		113
	6	8	2	8	14		8
H	46	31	4	12	8	- 1	100
	12	8	1	3	2		26
	6	1	2	1	2		2
RD DF					- 1		
TOTAL	15	49	3	23	9	1	100
	210	671	47	318	129		1375
	100	100	100	100	100		100

0112 - 1 - MIL/GS RATING vs. FIELD OF TASK

There appear to be relatively more people of a higher rating performing tasks in the aircraft and flight equipment as compared to people in other fields.

1-12	01	02	03	05	06	10	11	12	14	15	
A	2		6	17	13	4		4	4	8	9
	1		3	9	7	2		2	2	4	
	1		7	4	12	5		2	4	15	
B	4	1	5	16	3	5	1	7	7	4	5
	4	1	6	18	3	6	1	8	8	4	
	5	4	14	9	5	14	11	8	16	15	
C	4	4	2	19	2	3		6	3	3	7
	8	8	4	39	4	6		12	6	6	
	10	31	10	19	7	14		12	12	22	
D	5	2	4	13	6	3		6	6	1	8
	15	5	14	41	18	8	1	19	18	2	
	19	19	33	20	30	18	11	19	37	7	
E	4	1	2	15	4	3	1	9	3	2	5
	13	4	5	48	14	11	4	30	11	6	
	17	15	12	24	23	25	44	30	22	22	
F	10	2	2	13	4	4	1	8	1	1	4
	23	5	4	28	9	9	2	18	2	2	
	30	19	10	14	15	20	22	18	4	7	
G	11	2	2	16	2		1	9	2	3	4
	12	2	2	18	2		1	10	2	3	
	16	8	5	9	3		11	10	4	11	
H	4	4	15	8	12	8		8			8
	1	1	4	2	3	2		2			
	1	4	10	1	5	5		2			
RO OF	1		- 1			- 1	1	- 1	1	1	
TOTAL	6	2	3	15	4	3	1	7	4	2	6
	77	26	42	203	60	44	9	101	49	27	
	100	100	100	100	100	100	100	100	100	100	

A

raft and flight equipment field

14	15	16	22	25	26	30	31	34	36	RD DF	TOTAL
4	8	9	8	6		8	2	8	4	- 3	100
2	4	5	4	3		4	1	4	2		53
4	15	6	3	4		2	3	4	3		4
7	4	5	7	6		22	1	4	2		100
8	4	6	8	7		24	1	4	2		111
16	15	8	7	8		11	3	4	3		8
3	3	7	10	5	2	18	1	7	5	- 1	100
6	6	14	21	11	5	38	3	15	10		210
12	22	18	17	13	17	18	8	16	14		15
6	1	8	11	6	1	16	2	7	4	- 1	100
18	2	24	35	18	4	50	6	23	12		313
37	7	30	28	21	13	23	16	24	17		23
3	2	5	9	7	3	16	4	9	3		100
11	6	16	28	22	9	52	14	30	9		326
22	22	20	23	26	30	24	37	31	13		24
1	1	4	9	4	4	12	3	8	10		100
2	2	8	20	10	10	26	7	17	23		223
4	7	10	16	12	33	12	18	18	33		16
2	3	4	5	11	2	16	4	3	10	- 3	100
2	3	5	6	12	2	18	4	3	11		113
4	11	6	5	14	7	8	11	3	16		8
		8	4	8		12	8		4	- 3	100
		2	1	2		3	2		1		26
		3	1	2		1	5		1		2
1	1	- 1				1	- 1				
4	2	6	9	6	2	16	3	7	5	- 1	100
49	27	80	123	85	30	215	38	96	70		1375
100	100	100	100	100	100	100	100	100	100		100

B

43

0114 - 1 - MIL/GS RATING vs. KIND OF TASK

There appear to be relatively more people of a higher rating performing R&D support tasks as compared to other tasks.

1-14	A	B	C	D	E	RD DF	TOTAL
A	11	34	9	42	4		100
	6	18	5	22	2		53
	3	3	8	6	2		4
B	15	48	7	27	3		100
	17	53	8	30	3		111
	10	8	13	8	3		8
C	16	49	5	26	4		100
	34	103	10	55	8		210
	19	15	16	15	8		15
D	14	51	4	26	5		100
	44	160	13	80	16		313
	25	23	21	22	16		23
E	12	53	4	26	5		100
	40	173	12	86	15		326
	23	25	19	24	15		24
F	7	49	5	23	15	1	100
	16	110	12	52	33		223
	9	16	19	15	34		16
G	8	50	2	25	15		100
	9	57	2	28	17		113
	5	8	3	8	18		8
H	38	35		15	12		100
	10	9		4	3		26
	6	1		1	3		2
RD DF		1	1	1	1		
TOTAL	13	50	5	26	7	- 1	100
	176	683	62	357	97		1375
	100	100	100	100	100		100

0125(u) - 1 - MIL/GS RATING vs. CLASS OF CHUNK

This table shows that there is little or no relationship between a person's rating and the classes of information used in the tasks.

1-25	A	B	C	D	E	F	G	H	I	J	K	L	M	RD DF	TOTAL
GS05					13 1	25 2		13 1	13 1	13 1	25 2 1			- 2	100 8
GS06						67 2			33 1						100 3
GS07	8 9 2	1 1 1	2 2 1	1 1 1	14 15 6	18 19 1		8 9 4	20 21 3	8 9 2	5 5 3	10 11 3	4 4 2	1	100 106 2
GS09	9 33 9	1 3 2	4 16 8	5 17 13	8 31 12	22 83 6	2 7 9	6 21 10	16 58 8	6 21 4	5 20 10	11 41 12	6 22 9	- 1	100 373 8
GS11	9 53 14	1 7 5	4 27 14	2 11 8	8 48 18	26 157 12	1 9 12	5 32 15	20 121 18	8 49 9	6 39 20	7 40 11	3 17 7		100 610 13
GS12	7 65 17	2 21 15	4 38 20	4 35 26	6 55 20	28 267 21	2 20 27	5 51 24	17 158 23	9 81 16	4 42 22	8 72 21	5 43 17	- 1	100 948 20
GS13	8 82 22	4 40 28	6 61 32	3 29 22	5 56 21	27 284 22	2 19 25	5 49 23	14 145 21	12 128 25	4 41 21	6 66 19	4 46 18		100 1046 22
GS14	10 59 16	4 25 17	3 16 8	2 13 10	4 25 9	32 192 15	1 8 11	2 13 6	13 76 11	13 80 16	2 12 6	7 41 12	6 36 14	1	100 596 13
GS15	9 23 6	6 15 10	2 5 3	2 4 3	6 16 6	26 67 5	1 1	4 10 5	12 30 4	19 48 9	2 5 3	7 18 5	7 17 7	- 2	100 259 6
GS16	13 6 2	7 3 2	7 3 2	2 1 1	4 2 1	29 13 1		9 4 2	4 2	13 6 1		7 3 1	4 2 1	1	100 45 1
OOE2						75 3		25 1							100 4
OOE3			7 1 1			14 2			29 4 1	43 6 1			7 1		100 14
OOE4				21 4 3		37 7 1			16 3	5 1	11 2 1	11 2 1		- 1	100 19
OOE5									25 1			75 3			100 4

| | | |

This table shows no outstanding features.

1-48	A	B	BLNK	RC OF	TOTAL
A	15	81	4		100
	8	43	2		53
	5	4	4		4
B	14	86			100
	15	96			111
	9	8			8
C	11	87	2		100
	24	182	4		210
	14	16	7		15
D	12	85	3		100
	38	266	9		313
	22	23	17		23
E	13	84	2	1	100
	44	275	7		326
	25	24	13		24
F	13	78	9		100
	30	173	20		223
	17	15	37		16
G	11	81	9	- 1	100
	12	91	10		113
	7	8	19		8
H	8	85	8	- 1	100
	2	22	2		26
	1	2	4		2

RC OF			- 1		
TOTAL	13	83	4		100
	173	1148	54		1375
	100	100	100		100

Using the chi squared test with the null hypothesis that a person's rating is independent of his use of DDC, it was found that at the five percent confidence level the hypothesis should be rejected. The table shows that higher rated people tend to use DDC and lower rated people do not.

1-50	A	B	BLNK	RD DF	TOTAL
A	19	81			100
	10	43			53
	2	6			4
B	32	68			100
	36	75			111
	6	10			8
C	35	65			100
	73	137			210
	11	19			15
D	47	53			100
	147	165	1		313
	23	23	17		23
E	56	43		1	100
	184	141	1		326
	29	19	17		24
F	52	46	2		100
	116	103	4		223
	18	14	67		16
G	51	49			100
	58	55			113
	9	8			8
H	62	38			100
	16	10			26
	3	1			2
RD DF	- 1		- 1		
TOTAL	47	53			100
	640	729	6		1375
	100	100	100		100

Using the chi squared test with the null hypothesis that a person's rating is independent of his use of information centers, it was found that at the five percent confidence level the hypothesis should be rejected. The table shows that as a person's rating increases, so does his use of information centers.

1-52	A	B	BLNK	RD DF	TOTAL
A	23	77			100
	12	41			53
	2	7			4
B	44	56			100
	49	62			111
	7	10			8
C	42	56	1	1	100
	89	118	3		210
	12	20	14		15
D	60	37	3		100
	188	117	8		313
	25	19	38		23
E	60	38	2		100
	197	124	5		326
	26	21	24		24
F	60	39	2	- 1	100
	131	86	4		223
	18	14	19		16
G	58	42			100
	65	48			113
	9	8			8
H	65	31	4		100
	17	8	1		26
	2	1	5		2
RD DF	- 1				
TOTAL	55	44	2	- 1	100
	750	604	21		1375
	100	100	100		100

0156 - 2 - MIL/GS RATING vs. PRESENCE OF INFORMATION PROBLEM

There appears to be no relationship between a person's rating and whether or not he has an information problem.

1-56	A	B	BLNK	RD DF	TOTAL
A	11	81	8		100
	6	43	4		53
	2	5	5		4
B	24	70	5	1	100
	27	78	6		111
	7	8	7		8
C	25	74	1		100
	52	155	3		210
	14	17	4		15
D	27	70	4	- 1	100
	84	218	11		313
	23	24	13		23
E	29	62	9		100
	96	202	28		326
	26	22	33		24
F	34	59	8	- 1	100
	75	131	17		223
	20	14	20		16
G	20	71	9		100
	23	80	10		113
	6	9	12		8
H	27	54	19		100
	7	14	5		26
	2	2	6		2
RD DF		- 1			
TOTAL	27	67	6		100
	370	921	84		1375
	100	100	100		100

0414 - 1 - HIGHEST DEGREE AND FIELD vs. KIND OF TASK

This table shows that people with engineering degrees tend not to be doing research work as frequently as people with scientific degrees.

4-14	A	B	C	D	E	RD DF	TOTAL
A	4	58	5	23	9	1	100
	6	79	7	32	13		137
	3	12	11	9	13		10
B	4	58	5	27	6		100
	21	305	26	145	32		529
	12	45	42	41	33		38
C	11	46	5	31	7		100
	41	170	18	114	25		368
	23	25	29	32	26		27
D	8	52	5	24	11		100
	7	48	5	22	10		92
	4	7	8	6	10		7
E	26	41	3	23	8	- 1	100
	35	54	4	30	10		133
	20	8	6	8	10		10
F	25	13		63		- 1	100
	2	1		5			8
	1			1			1
G	59	26	2	6	6	1	100
	55	24	2	6	6		93
	31	4	3	2	6		7
K	60	13		20	7		100
	9	2		3	1		15
	5			1	1		1
RD DF	1	- 1	1		1		- 1
TOTAL	13	50	5	26	7	- 1	100
	176	683	62	357	97		1375
	100	100	100	100	100		100

No outstanding features were observed from the data presented in this table.

4-25	A	B	C	D	E	F	G	H	I	J	K	L	M	RD DF	TOTAL
000	2 11 3	4 19 13	4 17 9	2 8 6	3 15 6	27 120 9	2 8 11	4 17 8	19 86 12	12 52 10	6 29 15	8 38 11	7 31 12		100 451 10
101	6 11 3	5 9 6	3 6 3	3 5 4	3 6 2	33 65 5	3 6 8	3 6 3	14 28 4	14 27 5	5 9 5	5 10 3	5 10 4	- 2	100 198 4
102	8 3 1	3 1 1	5 2 1	8 3 2	3 1	25 10 1	3 1 1	5 2 1	15 6 1	10 4 1	3 1 1	13 5 1	3 1	- 4	100 40 1
103	8 31 8	3 12 8	2 6 3	7 24 18	3 12 4	27 99 8	3 12 16	5 17 8	14 50 7	12 44 9	7 25 13	5 19 5	4 16 6		100 367 8
104	9 25 7	1 4 3	5 13 7	2 5 4	17 47 17	18 50 4	1 1	8 22 10	13 37 5	10 28 5	3 8 4	11 30 9	3 9 4		100 279 6
105	10 42 11	3 14 10	5 19 10	2 8 6	6 26 10	27 108 8	1 4 5	7 28 13	15 61 9	9 35 7	3 13 7	8 34 10	4 15 6		100 407 9
107	3 5 1	7 13 9	4 7 4	2 3 2	6 12 4	28 56 4	1 2 3	9 17 8	15 30 4	13 26 5	2 3 2	6 11 3	7 14 5	- 3	100 199 4
108	10 14 4	1 2 1	4 5 3	1 2 1	4 6 2	32 43 3		1 1	18 24 3	14 19 4	5 7 4	3 4 1	7 9 4		100 136 3
111	9 74 20	3 24 17	5 44 23	1 13 10	5 43 16	28 240 19	1 7 9	3 30 14	18 158 23	10 85 16	4 33 17	8 71 20	5 46 18		100 868 19
113	5 30 8	3 21 15	7 42 22	1 8 6	3 18 7	27 165 13	3 18 24	3 21 10	19 113 16	9 55 11	4 24 14	8 48 14	6 39 15	2	100 604 13
201	12 19 5	3 4 3	3 5 3	3 5 4	7 11 4	25 40 3	4 6 8	5 8 4	9 14 2	15 23 4	3 4 2	6 9 3	6 10 4	- 1	100 158 3
202	16 7 2			5 2 1	11 5 2	32 14 1		5 2 1	7 3	11 5 1	5 2 1	2 1	7 3 1	- 1	100 44 1
203	12 9 2	4 3 2	4 3 2	3 2 1	8 6 2	28 22 2	3 2 3	5 4 2	17 13 2	8 6 1	3 2 1	3 2 1	5 4 2	- 3	100 78 2
204	13 6 2			2 1 1	29 14 5	15 7 1		13 6 3	4 2	6 3 1	4 2 1	8 4 1	6 3 1		100 48 1
205	13	1	4	3	6	30	2	10	5	8	3	10	5		100

| | | |

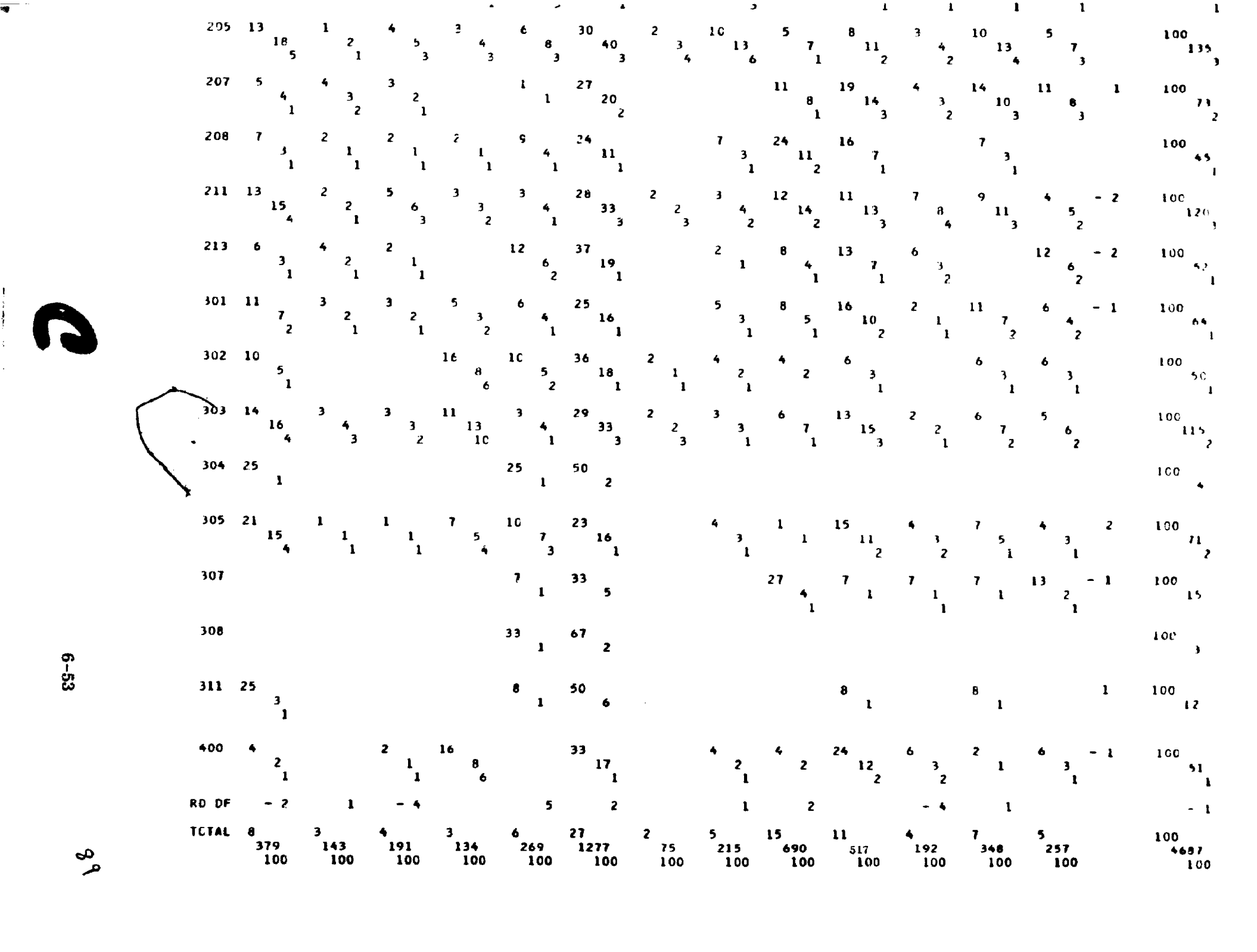

| | | |

0428 - 2 - HIGHEST DEGREE AND FIELD vs. MEDIA

This table shows that people with bachelor's degrees in engineering tend not to use journals to obtain information, whereas people with advanced degrees in science tend to use both journals and texts.

4-28	A	B	C	D	K	N	P	R	S	T	V	W	Z	RD DF	TOTAL
A	15 108 12	31 216 9	3 20 8	7 50 9	9 64 10	1 4 11	3 18 5	16 113 9	3 24 5	1 5 8	12 84 10		2 4	- 1	100 708 9
B	14 417 48	30 916 40	4 122 47	7 213 37	9 267 42	10 27	2 61 16	18 544 42	4 128 29	1 34 57	10 292 35	1 17 21	1 16 35	- 1	100 3037 39
C	10 208 24	29 609 27	3 63 24	9 195 34	7 150 24	7 19	5 95 25	15 312 24	6 133 30	9 15	11 238 29	2 40 49	1 13 28	2	100 2072 27
D	10 49 6	30 145 6	1 5 2	8 40 7	10 50 8	1 4 11	5 23 6	15 74 6	5 26 6	1 3 5	12 60 7	2 2	1 4 9	1	100 485 6
E	8 60 7	27 212 9	3 24 9	6 47 8	9 72 11	1 7 19	8 60 16	18 141 11	7 55 12	1 5 8	11 86 10	2 15 18	1 4 9	- 2	100 788 10
F	7 4	28 17 1	2 1	10 6 1			10 6 2	28 17 1	5 3 1	7 4		2 1 1	2 1 2	- 1	100 60 1
G	4 20 2	25 136 6	4 19 7	4 24 4	4 21 3	1 5 14	18 97 26	15 79 6	13 68 15	1 3 5	10 55 7	1 7 9	1 6 13	- 1	100 540 7
K	6 6 1	25 25 1	6 6 2	4 4 1	10 10 2		19 19 5	9 9 1	9 9 2	1 1 2	11 11 1				100 100 1
RD DF		1	1	- 1		- 1	- 1				1				
TOTAL	11 872 100	29 2276 100	3 260 100	7 579 100	8 634 100	37 100	5 379 100	17 1289 100	6 446 100	1 60 100	11 830 100	1 82 100	1 46 100		100 7790 100

No outstanding features were observed from the data presented in this table.

4-34	A	B	F	X	RD DF	TOTAL
A	9 39 15	6 26 6	4 16 10	82 370 10	- 1	100 451 10
B	6 115 44	9 156 33	2 32 21	83 1504 40		100 1807 39
C	4 57 22	9 118 25	3 37 24	84 1079 28		100 1291 28
D	3 10 4	13 38 8	5 15 10	78 227 6	1	100 290 6
E	5 24 9	12 56 12	6 26 17	77 357 9		100 463 10
F	3 1	30 9 2	3 1 1	63 19	1	100 30 1
G	5 15 6	19 58 12	7 21 14	69 210 6		100 304 6
K	4 2 1	10 5 1	14 7 5	73 37 1	- 1	100 51 1
RD DF	- 1	1	- 2			- 1
TOTAL	6 263 100	10 466 100	3 155 100	81 3803 100		100 4687 100

AUERBACH®

0412 1 HIGHEST DEGREE AND FIELD vs. FIRST SOURCE

This table shows that there is no significant relationship between a person's highest degree and field and the choice of the first source to obtain information.

4-42	A	B	E	F	H	I	K	L	RO DF	TOTAL
A	12 53 11	4 17 6	21 93 9	4 16 7	15 66 11	16 71 9	6 29 12	24 106 11	- 2	100 451 10
B	12 212 43	7 122 46	22 402 39	4 68 28	14 255 42	16 282 34	6 117 50	19 349 35		100 1807 39
C	11 140 28	5 62 23	23 301 29	6 77 32	13 173 28	16 211 26	3 45 19	22 282 28	1	100 1291 28
D	9 25 5	5 15 6	20 57 6	3 8 3	11 32 5	22 64 8	6 17 7	25 72 7	- 1	100 290 6
E	10 45 9	8 37 14	21 99 10	5 23 9	10 46 8	22 101 12	3 15 6	21 97 10		100 463 10
F	7 2		13 4	23 7 3	7 2	23 7 1	3 1	23 7 1	1	100 30 1
G	6 18 4	4 11 4	20 61 6	12 35 14	10 30 5	25 75 9	3 9 4	21 65 7	- 1	100 304 6
K	2 1	8 4 1	20 10 1	18 9 4	8 4 1	18 9 1	2 1	25 13 1	- 1	100 51 1
RO DF							2			- 1
TOTAL	11 496 100	6 268 100	22 1027 100	5 243 100	13 608 100	17 820 100	5 234 100	21 991 100		100 4687 100

0450 - 2 - HIGHEST DEGREE AND FIELD vs. USE OF DDC

People with engineering degrees (B, D, and F) tend to use DDC more than those with scientific degrees (C, E, G, and K).

4-50	A	B	BLNK	RD OF	TOTAL
A	31	67	2		100
	42	92	3		137
	7	13	50		10
B	47	53			100
	247	280	2		529
	39	38	33		38
C	43	57			100
	159	208	1		368
	25	29	17		27
D	61	39			100
	56	36			92
	9	5			7
E	53	47			100
	70	63			133
	11	9			10
F	75	25			100
	6	2			8
	1				1
G	58	42			100
	54	39			93
	8	5			7
K	40	60			100
	6	9			15
	1	1			1
RD OF	- 1				- 1
TOTAL	47	53			100
	640	729	6		1375
	100	100	100		100

0456 - 2 - HIGHEST DEGREE AND FIELD vs. PRESENCE OF INFORMATION PROBLEM

Proportionally more people with higher degrees consider that they have an information problem.

4-56	A	B	BLNK	RD OF	TOTAL
A	23	70	7		100
	32	96	9		137
	9	10	11		10
B	26	68	7	- 1	100
	136	358	35		529
	37	39	42		38
C	26	70	4		100
	94	259	15		368
	25	28	18		27
D	36	58	7	- 1	100
	33	53	6		92
	9	6	7		7
E	32	61	7		100
	43	81	9		133
	12	9	11		10
F	50	38	13	- 1	100
	4	3	1		8
	1		1		1
G	25	67	9	- 1	100
	23	62	8		93
	6	7	10		7
K	33	60	7		100
	5	9	1		15
	1	1	1		1
RD OF			- 1		- 1
TOTAL	27	67	6		100
	370	921	84		1375
	100	100	100		100

AUERBACH

0725 - 1 - MOS OR JOB CODE vs. CLASS OF CHUNK

People with an occupational class in mathematics-statiatics used math aids and formulae information relatively more than the rest of the population.

7-25	A	B	C	E	F	H	J	M	RD DF	TOTAL
A	9	1	23	5	36	3	13	9	1	100
	16	2	40	8	63	6	23	15		173
	4	1	4	3	3	3	4	6		4
B	7	3	20	5	46	4	10	6	- 1	100
	165	76	471	116	1086	87	242	132		2375
	44	53	50	43	55	40	47	51		51
C	11	2	20	6	38	6	12	4	1	100
	118	23	211	59	400	64	126	46		1047
	31	16	22	22	20	30	24	18		22
D	9	1	20	20	29	9	9	3		100
	26	4	55	55	80	25	24	8		277
	7	3	6	20	4	12	5	3		6
E	7	5	20	4	41	4	13	7	- 1	100
	54	38	163	31	338	33	102	56		815
	14	27	17	12	17	15	20	22		17
RD DF			1		1					
TOTAL	8	3	20	6	42	5	11	5		100
	379	143	940	269	1967	215	517	257		4687
	100	100	100	100	100	100	100	100		100

0728 - 2 - MOS OR JOB CODE vs. MEDIA

People in an engineering occupational class rarely use journals to obtain specific information, whereas people in a scientific occupational class use journals relatively more frequently.

7-28	A	B	C	D	K	N	P	R	S	T	V	W	Z	RD DF	TOTAL
A	5 14 2	26 74 3	4 10 4	2 7 1	6 18 3	1 4 11	20 57 15	10 28 2	9 25 6	1 2 3	15 42 5		1 2	1	100 282 4
B	14 565 65	29 1144 50	4 149 57	7 271 47	9 336 53	17 46	2 89 23	17 681 53	4 175 39	1 42 70	11 416 50	1 26 32	14 30	1	100 3925 50
C	9 151 17	27 470 21	3 55 21	8 144 25	6 103 16	1 12 32	9 151 40	16 277 21	8 145 33	1 10 17	11 198 24	1 24 29	1 12 26	- 1	100 1752 22
D	4 16 2	33 139 6	1 4 2	11 48 8	8 35 6	1 3	2 10 3	16 67 5	9 37 8	1 2	9 38 5	6 24 29	1 3 7		100 423 5
E	9 126 14	32 449 20	3 42 16	8 109 19	10 142 22	3 8	5 72 19	17 236 18	5 64 14	5 8	10 136 16	1 8 10	1 16 35	- 1	100 1408 18
RD DF								1							1
TOTAL	11 872 100	29 2276 100	3 260 100	7 579 100	8 634 100	37 100	5 379 100	17 1289 100	6 446 100	1 60 100	11 830 100	1 82 100	1 46 100		100 7790 100

0734 - 2 - MOS OR JOB CODE vs. USE OF SEARCH AIDS

Though the use of search aids was only determined for those chunks requiring a large amount of information, it appears from this table that people in the sciences tend to use search aids more than do people in engineering.

7-34	A	B	F	X	RD DF	TOTAL
A	5	13	6	76		100
	8	23	11	131		173
	3	5	7	3		4
B	7	8	2	83		100
	156	201	54	1964		2375
	59	43	35	52		51
C	4	11	6	79		100
	38	119	60	830		1047
	14	26	39	22		22
D	6	9	1	84		100
	16	24	4	233		277
	6	5	3	6		6
E	6	12	3	79		100
	45	99	26	645		815
	17	21	17	17		17
RD DF	1		- 1			
TOTAL	6	10	3	81		100
	263	466	155	3803		4687
	100	100	100	100		100

0742 - 1 - MOS OR JOB CODE vs. FIRST SOURCE

This table shows that there are no unusual relationships between a person's occupational class and the choice of a first source to obtain information. (See Table 0442.)

7-42	A	B	E	F	H	I	K	L	RD DF	TOTAL
A	8	3	17	7	11	25	2	27		100
	13	6	29	12	19	44	3	47		173
	3	2	3	5	3	5	1	5		4
B	12	5	21	4	14	17	7	21	- 1	100
	274	123	510	91	324	406	155	492		2375
	55	46	50	37	53	50	66	50		51
C	10	5	22	7	11	19	4	22		100
	106	48	231	77	117	201	38	229		1047
	21	18	22	32	19	25	16	23		22
D	15	5	23	5	11	18	4	19		100
	42	15	63	14	30	49	11	53		277
	8	6	6	6	5	6	5	5		6
E	7	9	24	6	14	15	3	21	1	100
	61	76	194	49	118	120	27	170		815
	12	28	19	20	19	15	12	17		17
RD DF	1				1	- 1				
TOTAL	11	6	22	5	13	17	5	21		100
	496	268	1027	243	608	820	234	991		4687
	100	100	100	100	100	100	100	100		100

This table shows no outstanding features other than that people engaged in the mathematics-statistics series seem to have relatively less of an information problem than those people in other job codes.

7-56	A	B	BLNK	RD OF	TOTAL
A	33	50	8	1	100
	16	28	4		48
	4	3	5		3
B	28	67	6	- 1	100
	192	466	39		697
	52	51	46		51
C	29	65	6		100
	87	197	17		301
	24	21	20		22
D	10	87	4	- 1	100
	8	71	3		82
	2	8	4		6
E	27	64	9		100
	67	159	21		247
	18	17	25		18
RD OF					
TOTAL	27	67	6		100
	370	921	84		1375
	100	100	100		100

AUERBACH®

0794 - 1 - MOS OR JOB CODE vs. TASK OUTPUT

This table shows that people with an engineering occupational class, as contrasted to other occupational classes, tend to be performing more tasks of a design nature and less of a concepts, experimental, or raw data nature. People with a science occupational class tend to be performing more tasks of an experimental and status nature, and less of a design nature.

7-94	A	B	C	D	E	F	G	H	I	J	K	L	M	N	RD OF	TOTAL
A	10 5 11		2 1	15 7 11	2 1 1	25 12 5		25 12 35	4 2 3	2 1 2	2 1 2		2 1 1	10 5 2	1	100 48 3
B	2 12 26	11 77 56	22 152 72	1 7 11	3 24 26	15 108 45	1 10 45	2 12 35	6 44 65	4 28 44	6 40 61	2 15 65	5 37 49	19 131 56	1	100 697 51
C	4 13 28	7 21 15	10 29 14	9 28 44	4 13 14	25 74 31	2 7 32	3 8 24	4 12 18	7 21 33	5 15 23	2 5 22	5 15 20	13 40 17		100 301 22
D	2 2 4	1 1 1	4 3 1	5 4 6	56 46 49	12 10 4		1 1 3	1 1 1	1 1 2	2 2 3		7 6 8	6 5 2	2	100 82 6
E	6 14 30	15 38 28	11 26 12	7 17 27	4 10 11	14 35 15	2 5 23	1 3	4 9 13	5 12 19	3 8 12	1 3 13	6 16 21	21 53 23	1	100 247 18
RD OF	1		1	1	- 1						- 1		1			
TOTAL	3 46 100	10 137 100	15 211 100	5 63 100	7 94 100	17 239 100	2 22 100	2 34 100	5 68 100	5 63 100	5 66 100	2 23 100	5 75 100	17 234 100		100 1375 100

0910 - 2 - TYPE OF ACTIVITY vs. KIND OF ACTIVITY

This table shows that research people (Col. A) are generally engaged in detailed scientific or engineering activities (Row A), whereas engineering people are fairly evenly engaged in detailed, scientific or engineering, technical evaluation and administration activities.

9-10	A	B	C	D	E	RD OF	TOTAL
A	24	47	3	20	5	1	100
	186	373	27	157	43		786
	89	56	57	49	33		57
B	4	59	4	22	10	1	100
	17	236	17	88	41		399
	8	35	36	28	32		29
C	3	35	1	35	27	- 1	100
	4	55	2	55	42		158
	2	8	4	17	33		11
D	9	22	3	56	9	1	100
	3	7	1	18	3		32
	1	1	2	6	2		2
RD OF			1				1
TOTAL	15	49	3	23	9	1	100
	210	671	47	318	129		1375
	100	100	100	100	100		100

AUERBACH ®

0912 - 1 - TYPE OF ACTIVITY vs. FIELD OF TASK

This table shows that there are relatively more technical evaluation and technical administruation people working in the field of aircraft and flight equipment than in other fields.

9-12	01	02	03	05	06	10	11	12	14	15	16	22	25	26	30	31
A	4	2	4	15	4	3	1	6	4	3	8	9	8	2	16	2
	28	18	34	115	32	23	5	45	33	21	66	73	66	15	125	17
	36	69	81	57	53	52	56	45	67	78	83	59	78	50	58	45
B	8	2	1	16	5	5	1	11	3	1	2	9	4	2	14	5
	30	7	5	63	21	18	4	45	13	4	9	35	17	9	55	20
	39	27	12	31	35	41	44	45	27	15	11	28	20	30	26	53
C	12	1	2	16	4	1		6	2			8	1	4	17	1
	19	1	3	25	6	2		10	3			12	2	6	27	1
	25	4	7	12	10	9		10	6			10	2	20	13	3
D					3	3		3		4	16	9			25	
					1	1		1		2	5	3			8	
					2	2		1		7	6	2			4	
RD OF								- 1				1			- 1	- 1
TOTAL	6	2	3	15	4	3	1	7	4	2	6	9	4	2	16	3
	77	26	42	203	60	44	9	101	49	27	80	123	85	30	215	38
	100	100	100	100	100	100	100	100	100	100	100	100	100	100	100	100

9-12	34	36	RD OF	TOTAL
A	6	3		100
	50	20		786
	52	29		57
B	9	3	- 1	100
	34	10		399
	35	14		29
C	8	18	- 1	100
	12	29		158
	13	41		11
D		34	1	100
		11		32
		16		2
RD OF				1
TOTAL	7	5	- 1	100
	96	70		1375
	100	100		100

30. If question 29 is No, what are the media or persons you habitually use? (Indicate chunk by number.)

I _____

II _____

III _____

IV _____

V _____

31. At the time you obtained this (name of info chunk) would you have preferred it presented to you in any other media or in any other physical arrangement? (Show list per instructions.)

I	II	III	IV	V

A. No, or No preference
B. Book, bulletin, article, report
C. Informal oral
D. Formal oral briefing
E. Live demonstration
F. Microfilm or microfiche
G. Slides or motion pictures
H. Correspondence and memos
I. Other (Specify) _____

_____

_____

_____

_____

32. Concerning the total amount of material potentially available to you which contains information on this chunk, how much of it were you actually exposed to? (A) one item of the available material which contains the information, (B) a sampling of the available material potentially containing information on this chunk, (C) all the available material potentially containing information on this chunk, (D) nothing.

33. Concerning the total amount of material available which potentially contains information on this chunk, how much of it did you want to be exposed to? (A) one item of the available material which contains the information, (B) a sampling of the available material potentially containing information on this chunk, (C) all the available material potentially containing information on this chunk.

_____

_____

_____

_____

_____

AUERBACH ®

Note to Interviewer: If either of the previous two questions imply a large amount of material, ask the following question:

34. Since you wanted to see a lot of material, would you have found title listings or abstracts useful to read first in order to help you select the chunk material to read in detail?

A. No, wanted to review all the material, explain
B. Title listings
C. Abstracts
D. Both title listings and abstracts
E. No preference
F. Already used either or both

I II III IV V

35. From the time you requested this chunk or started to search for it, what was the actual time it took to GET it?

36. From the time you requested this chunk or started to search for it, was there a maximum time you could have allowed to get it?

A. No or Not applicable
B. Under one day
C. Under one week
D. Under one month
E. Under three months
F. Over three months
G. Received with task assignment

* 37. I want to ask you about how up-to-date you wanted this information. Did you have to have this (name of info chunk) so up to date that it needed to contain inputs a few days after they were discovered or produced by the originating person?

— DELETED —

A. Yes
B. No
C. Info never found

38. Now I would like to ask you about the depth of (name of info chunk) you RECEIVED. Did you GET a: (A) once over lightly of the subject, (B) detailed analysis, (C) specific answer, (D) nothing.

39. At the time you recognized the need for (name of info chunk), did you WANT an (A) once over lightly of the subject, (B) detailed analysis, or (C) specific answer?

* This question was deleted because of difficulty encountered in conveying the concept of age of information to the respondents.

(Note: Ask the next question only if the info chunk inputs were written.)

40. How was this chunk of information laid out when you got it (name of info chunk)?

I	II	III	IV	V

41. At the time you requested the chunk of information, how would you have liked it to be laid out? (Show list.)

A. Info not obtained	E. Photos
B. Narrative text	F. Graphical and text
C. Tables or lists	G. Photos and text
D. Graphical — diagrams, drawings, schematics, flow charts, graphs, maps	H. Graphical and lists
	I. Other combinations (explain)
	J. Other (specify)

You may have had to go to several sources or places before you found this (name of info chunk). In the next few questions, I would like to talk only about the first of these sources.

42. What was the first organization or person you went to in order to obtain this information?

A. Received with task assignment — (even if given by Supervisor initially)	G. Library — search by self
B. Supervisor — (if given by Supervisor after assignment)	H. Departmental bookcase or files
C. Assignment to subordinate	I. Own Collection
D. Consultants (outside)	J. Information or data centers
E. Colleague	K. From manufacturer or supplier
F. Librarian or technical researcher	L. Other (specify)

43. What was the principal reason you used this first source?

A. Received with task assignment	E. Recalled from mind that specific chunk was available from this source.
B. Most authoritative	F. Found helpful previously
C. Only source known	G. Other (specify)
D. Availability (handy), easy to use.	

44. (If first source was a person) What were the words you used to express your interrogation of this first source of information?

(If first source was an object) Exactly what were the questions you formed in your mind to interrogate this first source of information?

I _____

_____

II _____

_____

III _____

_____

IV _____

_____

V _____

_____

45. What did you get from this first source. (A) All the information needed for this chunk, (B) Part of the information, (C) Reference to further information, or (D) Nothing?

I	II	III	IV	V

_____

_____

_____

Note to Interviewer: The next two questions are not concerned with the first source any longer; they refer to the whole chunk.

46. Was this chunk (A) absolutely essential to the conclusion of the task or (B) could you somehow have completed the task without it?

_____

_____

_____

_____

47. Was the chunk of info used: (A) Directly in the task, (B) As background information, (C) A lead to other information, (D) Not at all or (E) Other (explain) ?

I	II	III	IV	V

Note to Interviewer: Return to page 5 and repeat the same question for each information chunk.

Note to Interviewer: The following question refers back to the task.

48. After the task was completed, did you find any information that was available but unknown to you at the time you were doing the task ?

A. Yes (explain)
B. No

95. Number of days since this task was completed.

AUERBACH

PART III UTILIZATION OF INFORMATION CENTERS

49. How often do you see or read TAB ?

A. Almost every issue
B. Once every 2 or 3 months
C. No more than once every 6 months
D. Never read TAB
E. Does not know of TAB

50. Do you use DDC (ASTIA) ?

A. Yes (explain) (skip to question 52)
B. No

51. Why do you not use DDC ?

A. Does not know of DDC
B. Physical location
C. Red tape
D. Security
E. Time (too long to obtain info)
F. Not relevant
G. Poor previous results
H. Other (explain)

52. Do you USE any of the DOD specialized information and/or data centers such as shown on this list?

A. Yes (Record names) (skip to question 54)
B. No

53. Why do you not use any of these kinds of centers ?

A. Do not know of such centers
B. Physical location
C. Red tape
D. Security
E. Time (too long to obtain info)
F. Not relevant
G. Poor previous results
H. Other (explain)

54. Have you ever used English translations or English abstracts of foreign literature ?

A. Yes
B. No

55. What is your usual source for obtaining these translations ?

PART IV GENERAL INFORMATION PATTERNS

Now we are going to look at all the tasks you have worked on over the last year. For the following questions, would you generalize about the technical information requirements you had on these tasks?

56. Did you have any serious trouble obtaining or locating technical information in order to perform or conclude these tasks?

A. Yes (ask questions 57 and 58)
B. No

57. Please explain the difficulty.

58. Could you offer a possible solution to this problem?

Note to Interviewer: Return to page 1 to complete the respondent's profile.

PART V SUBJECTIVE COMMENTS

59. How would you summarize the respondent in relation to external STINFO needs:

A. Has a very large need of external STINFO
B. Has moderate need of external STINFO
C. Has insignificant need of external STINFO

60. Any other opinions of respondent's STINFO patterns:

AUERBACH

SECTION V. COMPUTER PROGRAM DOCUMENTATION

5.1 SUMMARY OF COMPUTER SYSTEM

To compile and analyze the source data developed during the main survey, AUERBACH prepared a number of computer programs which are documented in this Section.

The general system used to compile, analyze, and print out specific analyses of interview data is illustrated by the flow chart shown in Figure 5-1. This system consists of six basic programs which are outlined in the following description.

(1) Computer Run to Create and Maintain the Interview Data Tape. Interview data reduced to punch card form can be converted to magnetic tape form. Data from these cards is used to create the original Interview Data Tape, and subsequent data on punched cards can be used to update the tape. Data for an entire interview may be deleted from the tape by using a card punched with a deletion code and the interview accession number.

(2) Computer Run to Analyze Data on the Interview Data Tape According to Specified Interview Questions. Question specifications are submitted on punched cards. These inquiry cards and the Inquiry Data Tape are then used to produce the Interview Data Analysis Tape, which contains data extracted from the Interview Data Tape according to the specifications in the inquiry cards.

(3) Computer Run to Sort the Interview Data Analysis Tape. The records on the Interview Data Analysis Tape are sorted to facilitate frequency calculations and formatting for the printing of results.

(4) Computer Run to Format Analyzed Interview Data and to Print. Records from the Sorted Interview Data Analysis Tape are counted, various calculations performed, and results formatted in computer memory until they are printed.

(5) Computer Run to Print Cell Identifications and Frequencies in Descending Sequence. Records from the Sorted Interview Data Analysis Tape related to two-level frequency distribution inquiries are processed to list frequencies of conjunction of interview answers in descending order by frequency.

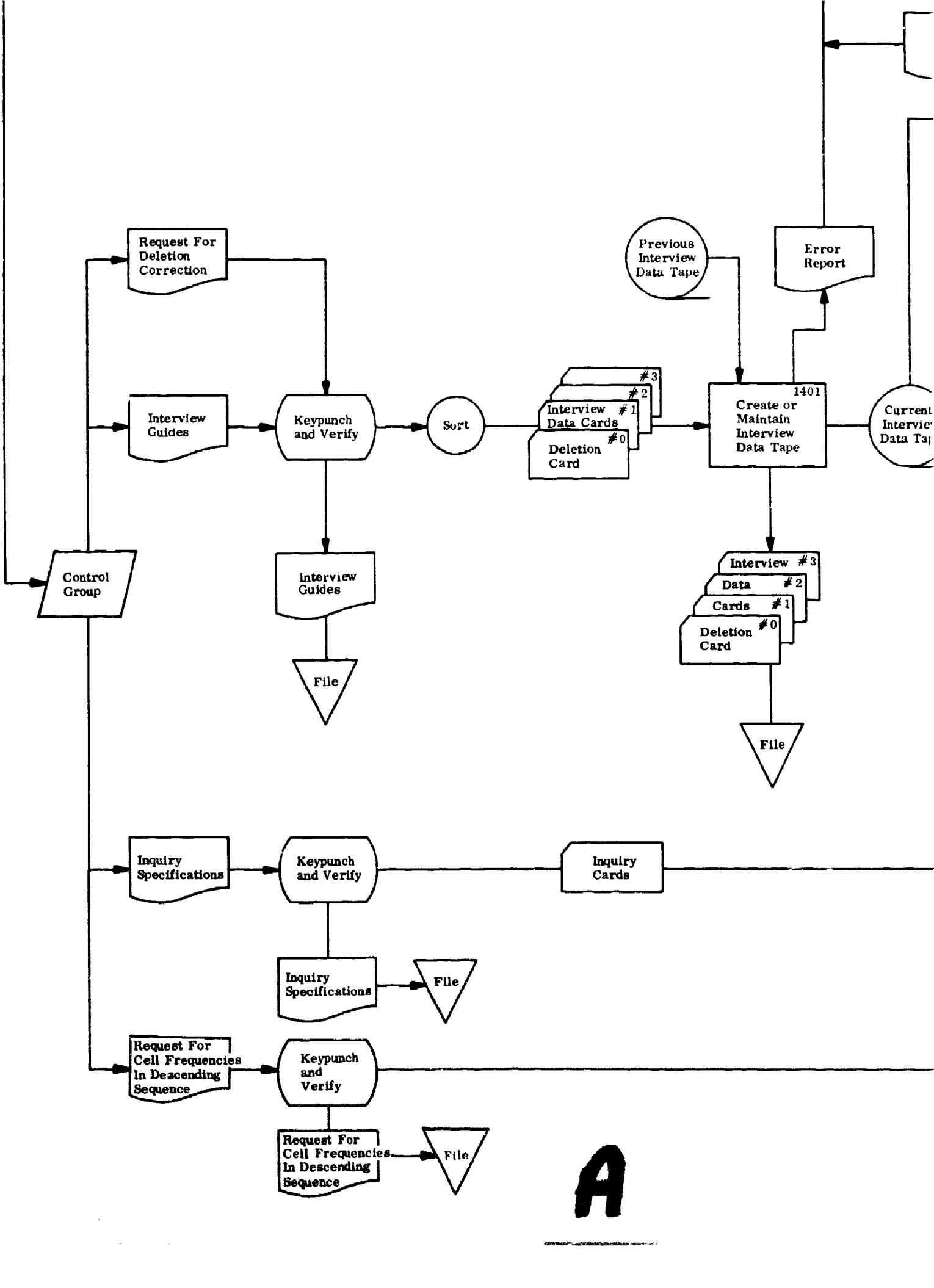
Request For Deletion Correction
Previous Interview Data Tape
Error Report
Interview Guides
Keypunch and Verify
Sort
Interview Data Cards #3 #2 #1
Deletion Card #0
1401
Create or Maintain Interview Data Tape
Current Interview Data Tape
Control Group
Interview Guides
File
Interview Data Cards #3 #2 #1
Deletion Card #0
File
Inquiry Specifications
Keypunch and Verify
Inquiry Cards
Inquiry Specifications
File
Request For Cell Frequencies In Deacending Sequence
Keypunch and Verify
Request For Cell Frequencies In Descending Sequence
File
A

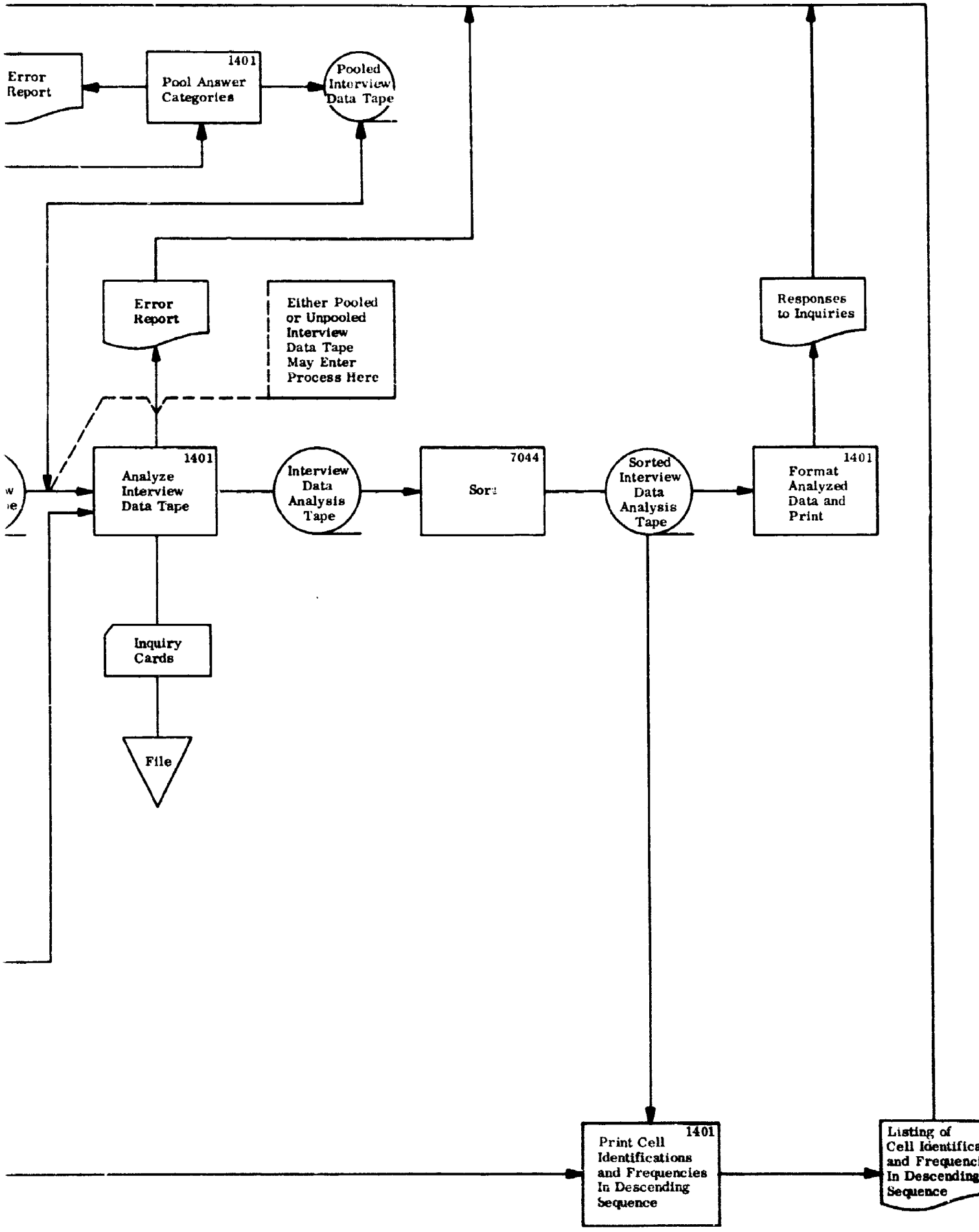

Figure 5-1. DOD Study — System Flow

(6) Computer Run to Pool Interview Answer Categories. Answers for some interview questions are taken from the Interview Data Tape and combined into more general categories on the Pooled Interview Data Tape. The answers to the other interview questions are merely duplicated on the Pooled Interview Data Tape.

5.2 APPROACH TO DOCUMENTATION

For each program written, the documentation described herein includes a definition of the input, the computer operating instructions, and a definition of the output. Program listings as well as source and object program decks for all programs have been submitted to DOD.

The programs used in this study were written for the IBM 1401 computer. Standard IBM 1401 Autocoder and Input-Output Control System (IOCS) software was used. Error conditions detected by program instructions generated by the Autocoder and IOCS must be resolved according to the procedures set forth in IBM's documentation of its Autocoder and IOCS.

Tape sorting for this study can be done on any device which can accept an IBM magnetic tape with blocks of 80 records, each record 24 characters long. However, sorting is planned for the IBM 7044, using the IBM 7044 Generalized Sorting System (the documentation for this sorting program is available from IBM).

5.3 COMPUTER OPERATOR INSTRUCTIONS

The operator instructions for each IBM 1401 program covered in this report include only those instructions peculiar to the particular program. All programs can run on an IBM 1401 computer having 16,000 positions of core, three tape drives, advanced programming, modify address feature, high-low-equal-compare, a 1403 Printer, and a 1402 Card Read Punch. Instructions for setting up the computer for all IBM 1401 programs, other than specific exceptions, follow.

(1) Cards

(a) Object Program Deck - All object programs are in card decks. The cards of each object program deck fall in the normal stacker after they are read.

The five-character program identification code is contained in card columns 76-80.

Each object program deck is sequenced by card columns 72-75.

(b) Date Card - A standard IOCS date card, which loads a five-digit date into computer memory positions 195 - 199, is inserted before the first EX card of the object program deck. This card falls into the normal stacker after it is read.

Card columns	Punched Data
1-3	Day
4-5	Year
40-71	L005199N000000N000000N000000104

(2) Printer

(a) Form - Stock paper (12 7/8 x 11 inches) is used.

(b) Carriage Control Tape - Channel 1 must be punched.

(3) Load and Start Routine - Normal.

(4) End-of-Job Indication - A programmed halt with '999' in both A and B address registers and with "END OF JOB" printed out indicates end of job.

(5) Sense Switches - Only the interrogated sense switch settings are listed. Those sense switch settings not listed are not interrogated.

5.4 COMPUTER RUNNING TIME

The running times shown in Table 5-1 are based on the following machine operations:

(1) The Interview Data Tape (ME002) and the Pooled Interview Data Tape (ME005) are written at 556 characters per inch.

(2) The tapes used in running the programs to create and maintain the Interview Data Tape (ME001) and to pool interview answer categories (ME005) are mounted on IBM 729 Model II Tape Drives.

(3) The Interview Data Analysis Tapes, both sorted and unsorted, are written having 800 characters per inch.

(4) In the program to analyze data on the Interview Data Tape (ME002), the input tape is mounted on an IBM 729 Model II Tape Drive, and the output tape (Interview Data Analysis Tape) is mounted on an IBM 729 Model V Tape Drive.

(5) For sorting, a four-way merge is used on a two-channel, IBM 7044. All working tapes are mounted on IBM 729 Model VI Tape Drives set with writing at 800 characters per inch.

(6) In the program to format and print the analyzed interview data, the Sorted Interview Data Analysis Tape is mounted on an IBM 729 Model V Tape Drive. The IBM 1403 Printer is equipped with the print storage feature.

Running time experience for the program to create the Interview Data Tape (ME001) is expressed in terms of output tape records produced per minute as shown in Table 5-1. Each output tape record consists of data from three input cards.

Running time experience for the program to pool answer categories (ME005) is also expressed in terms of output tape records produced per minute. Each output tape record is produced from a single input tape record.

For the programs to analyze (ME002), sort, format, and print (ME004), the timings are based on the use of an Interview Data Tape of 1,375 interview records. The running time experience is expressed in terms of minutes required to process each inquiry element. An inquiry element is each interview question specified for an inquiry. Each inquiry has from one to three elements (i.e., specified interview questions).

TABLE 5-1. COMPUTER RUNNING TIME EXPERIENCE

	Output Tape Records Produced per Minute
Create Interview Data Tape (ME001).	100
Pool Answer Categories (ME005)	75
	Minutes/Inquiry Element
Analyze the Interview Data Tape (ME002)	2.0
Sort Analysis Tape.	0.3
Format and Print (ME004).	0.5

5.5 PREPARATION OF INQUIRIES FOR INTERROGATION OF MASTER FILE OF INTERVIEW DATA MAINTAINED ON MAGNETIC TAPE

Each inquiry submitted to the system must be entered on a punched card, which is used by the computer programs to select, from the Interview Data Tape, that data whicl requires further processing, formatting, and printing to satisfy the needs of the inquirer. Up to three inquiries may be punched into a single card, beginning at the left.

(1) Specification of Interview Questions and Answers. When specifying an interview question number, always use two digits. If necessary, fill in high-order zeros.

When specifying an interview answer for an intersection or combination inquiry, always right justify the specification in the four-character field provided. Specify the answer exactly as it was recorded on the Interview Guide. If the answer specification does not require four characters, leave the high-order positions blank in the four-character field.

(2) Types of Inquiry Format.

(a) Simple frequency distribution

To obtain the frequency of occurrence of each answer to a single specified interview question, specify a single interview question in the Interview Question Identification #3 field.

(b) Two-level frequency distribution

To obtain the frequency with which each answer to a specified question occurs in conjunction with each answer to another specified question on the same interview, specify the interview question whose answers are to be arrayed vertically down the left side of the matrix of the final printout, in the Interview Question Identification #2 field, and specify the interview question whose answers are to be arranged horizontally across the top of the matrix of the final printout in the Interview Question Identification #3 field.

(c) Three-level frequency distribution

To obtain the frequency with which each answer to one specified question occurs in conjunction with each answer to another specified question and in conjunction with each answer to a third specified question, specify the interview question, whose

answers are to be used to head each entire matrix of the final printout, in the Interview Question Identification #1 field.

The interview question specifications for the Interview Identification #2 and #3 fields are the same as for two-level frequency distributions discussed above.

(d) Intersection Inquiries

If both the total number of interviews and a list of the accession numbers of interviews meeting the specification are desired, enter a 3 in the Record Code field.

If only the total number of interviews is desired, enter a 2 in the Record Code field.

For any negative element of an intersection inquiry (logical negation) superimpose an 11-zone punch in the low-order position of the Interview Question Identification field.

For a single element intersection inquiry, specify the interview question in the Interview Question Identification #3 field and the interview answer in the Interview Answer #3 field.

For a two element intersection, specify interview questions in the Interview Question Identification #3 and #2 fields and corresponding interview answers in the Interview Answer #3 and #2 fields, respectively.

For a three element intersection, specify interview questions in the Interview Question Identification #3, #2, and #1 fields, and specify corresponding interview answers in the Interview Answer #3, #2, and #1 fields, respectively.

(e) Combination Inquiries

To obtain a simple frequency distribution of the answers to a specified interview question for all interviews which have specified answers to each of one or two questions, enter an asterisk, '*', in the low order position of the Interview Answer #3 field and the interview question number of the question, whose answers are to be distributed, in the Interview Question Identification #3 field.

As in the intersection inquiry, for any negative element of the intersection portion of the combination inquiry (logical negation), superimpose an 11 zone punch in the low-order position of the Interview Question Identification field.

AUERBACH ®

If a single element intersection is specified, specify the interview question in the Interview Question Identification #2 field, and specify the interview answer in the Interview Answer #2 field.

If the two element intersection is specified, specify interview questions in the Interview Question Identification #2 and #1 fields and specify the corresponding interview answers in the Interview Answer #2 and #1 fields, respectively.

5.6 SPECIFICATION OF TWO-LEVEL FREQUENCY DISTRIBUTION INQUIRIES FOR WHICH THE FREQUENCIES ARE TO BE LISTED IN DESCENDING SEQUENCE

The Inquiry Specification Card is used by the computer program to select data from the Sorted Interview Data Analysis Tape for formatting and printing. The data on this tape was placed there in response to various inquiries which were made against the Interview Data Tape (the master file of data obtained by interviewing the users of scientific and technical information).

Each Inquiry Specification Card identifies one inquiry for which data are to be formatted and printed, and also specifies which data are to be formatted and printed. (See Figure 5-2 for card format.) The number of Inquiry Specification Cards that may b entered in a single computer run is not limited by the program. The procedures for ide tifying an inquiry and specification of data to be formatted and printed are given below.

(1) Identification of Inquiry

(a) Identify only inquiries requesting two level frequency distributions.

(b) Punch the Interview Question Identification of the first question, specified in the inquiry, in the first field in the card for Interview Question Identification numbers.

(c) Punch the Interview Question Identification of the second question, specified in the inquiry, in the second field in the card for Interview Question Identification numbers.

(2) Specification of Data to be Formatted and Printed

(a) Cell frequencies in descending sequence

(i) Punch the minimum frequency of cells for which identifications and frequencies

are to be printed in the card field, Minimum Frequency Specification.

(ii) If this field is left blank, the program assumes a 1 has been entered.

(iii) To suppress printing of cell frequencies in descending sequence, punch a 9 in the first position of the field, Minimum Frequency Specification. This specification would be used if only cells with zero frequency were to be identified in the printed listing.

(b) Cells with zero frequency

(i) Punch a 1 in the Empty Cell Field if the identifications of cells with zero frequencies are to be printed.

(ii) Leave this field blank if identifications of cells with zero frequencies are not to be printed.

5.7 COMPUTER RUN TO CREATE OR MAINTAIN THE INTERVIEW DATA TAPE

This computer run creates or maintains the Interview Data Tape with data provided in the Interview Data cards. (See Figure 5-3 for general logic flowchart.)

(1) Input Data Description. In a file maintenance run, the interview Data Tape to be updated is input. For initial file creation, no input tape is required.

Interview Data cards are input for both file creation and file maintenance runs. If it is desired to delete all data for an entire interview from the Interview Data Tape, deletion cards may be used as input only for a file maintenance run. The formats of these cards follow (also see Figure 5-3):

Card Columns	Name of Field and Question Number for Analysis Purposes	Explanation and Question Number on Interview Guide
	INTERVIEW DATA CARD NO. 1	
1-4	Interview Accession Number	Always a four digit number stamped on the upper right hand corner of page one.
5	Question 99, Interviewer's Name	Always one digit numeric.

AUERBACH

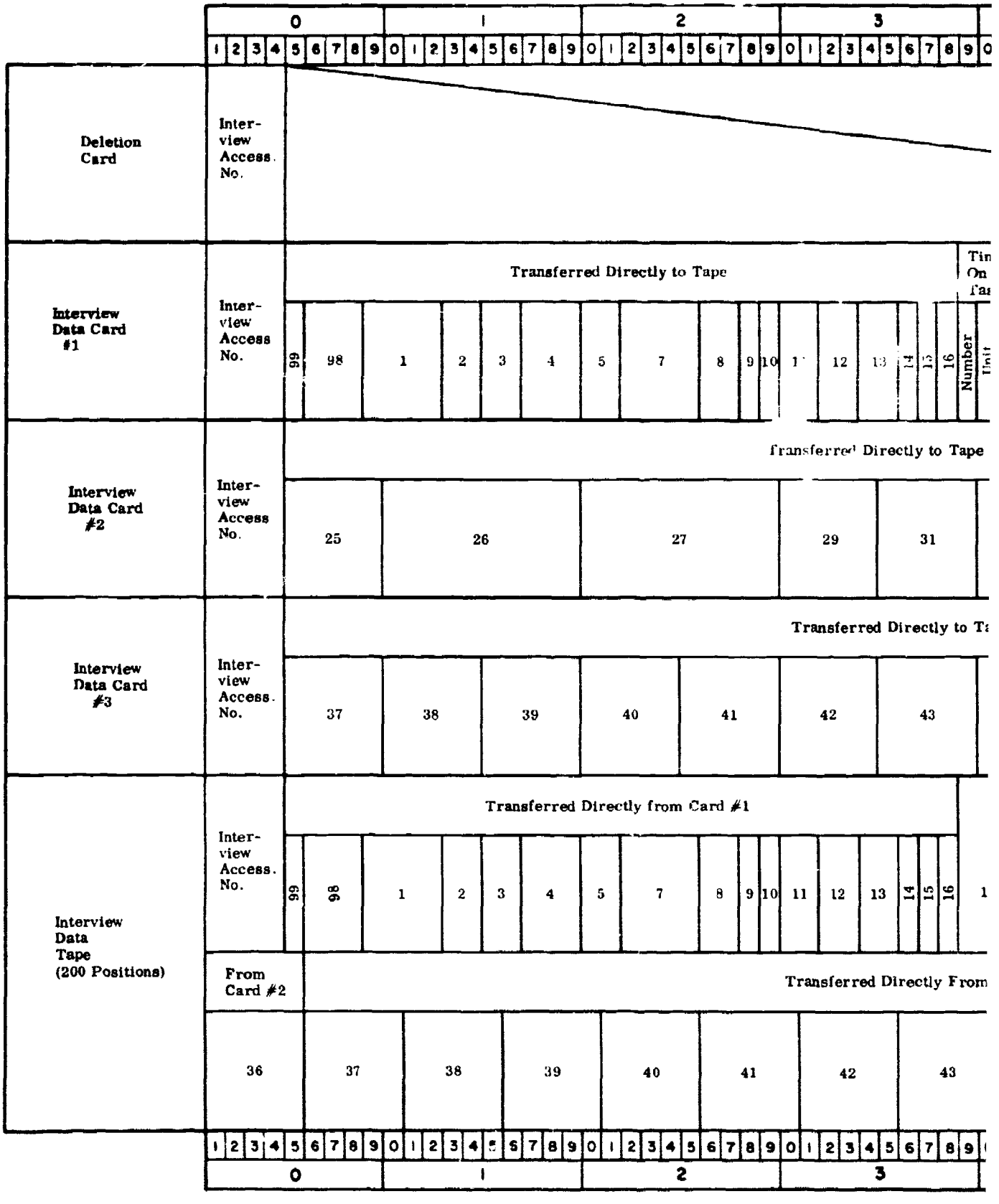

NOTE: The numbers in the foregoing records refer to the interview answers entered in the respective f

A

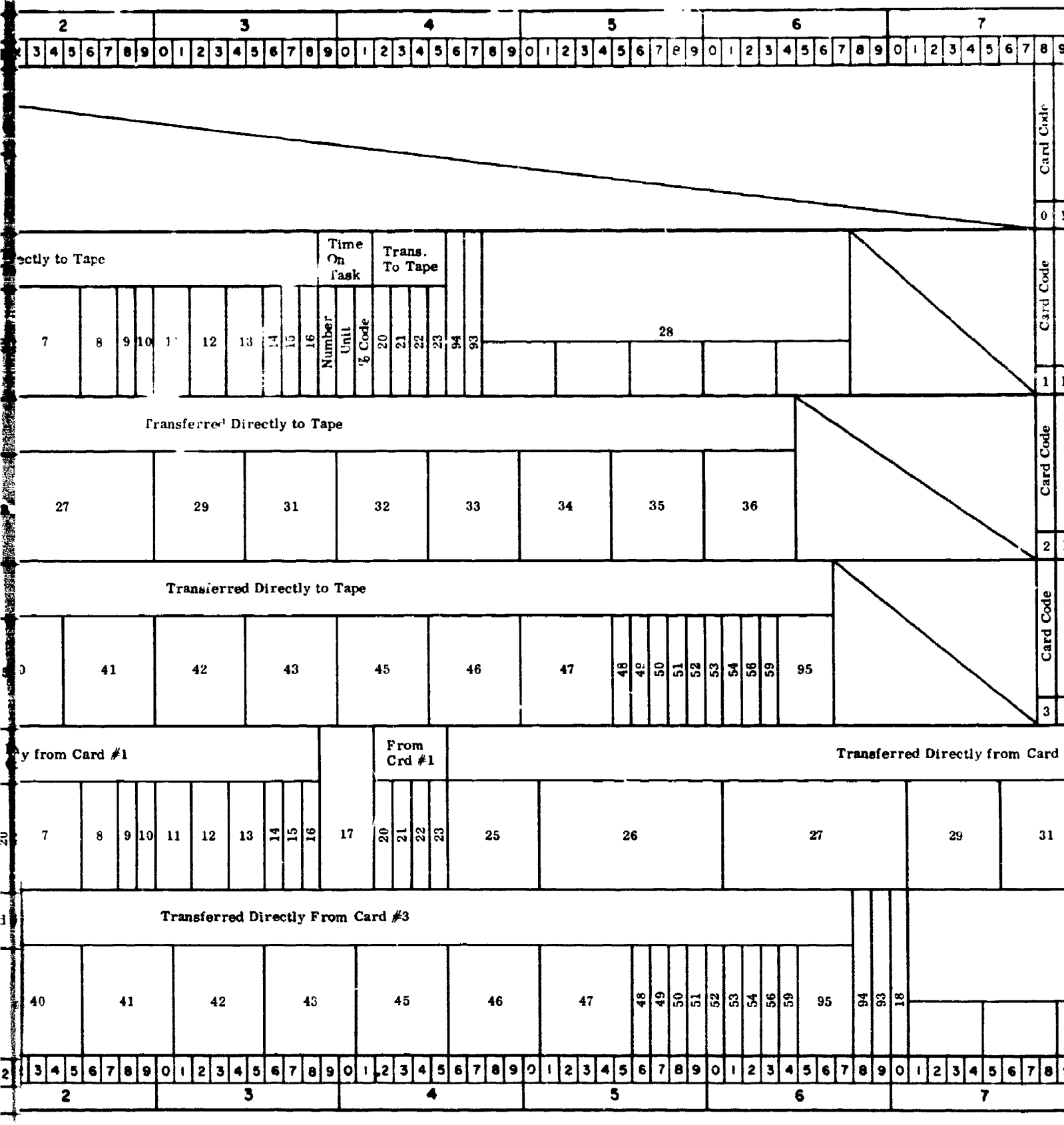

e interview answers entered in the respective fields.

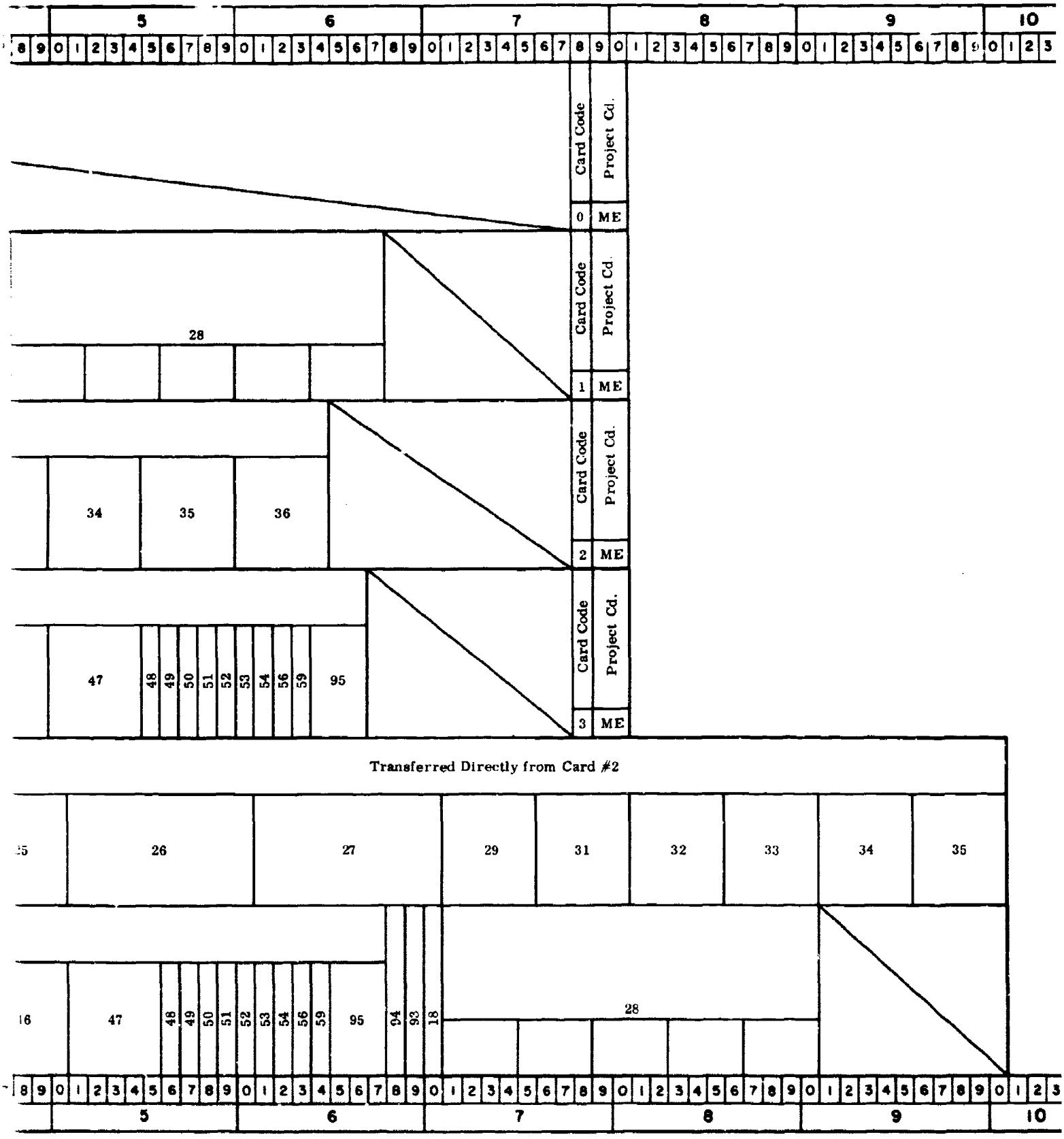

Figure 5-2. Record Layouts

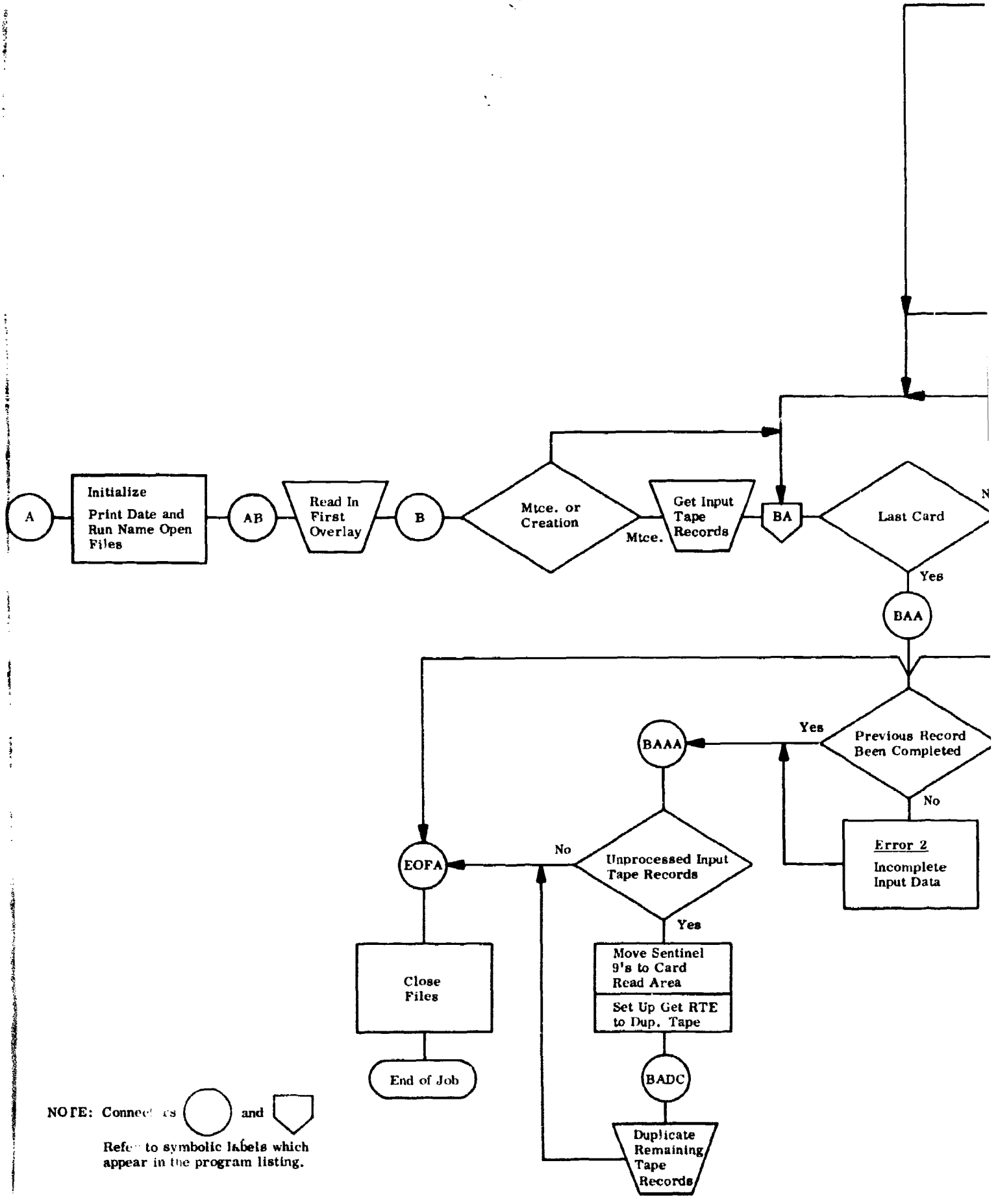
A
Initialize
Print Date and Run Name Open Files
AB
Read In First Overlay
B
Mtce. or Creation
Mtce.
Get Input Tape Records
BA
Last Card
N
Yes
BAA
Previous Record Been Completed
Yes
BAAA
No
Error 2
Incomplete Input Data
Unprocessed Input Tape Records
No
EOFA
Yes
Close Files
Move Sentinel 9's to Card Read Area
Set Up Get RTE to Dup. Tape
End of Job
BADC
Duplicate Remaining Tape Records
NOTE: Connectors and
Refer to symbolic labels which appear in the program listing.

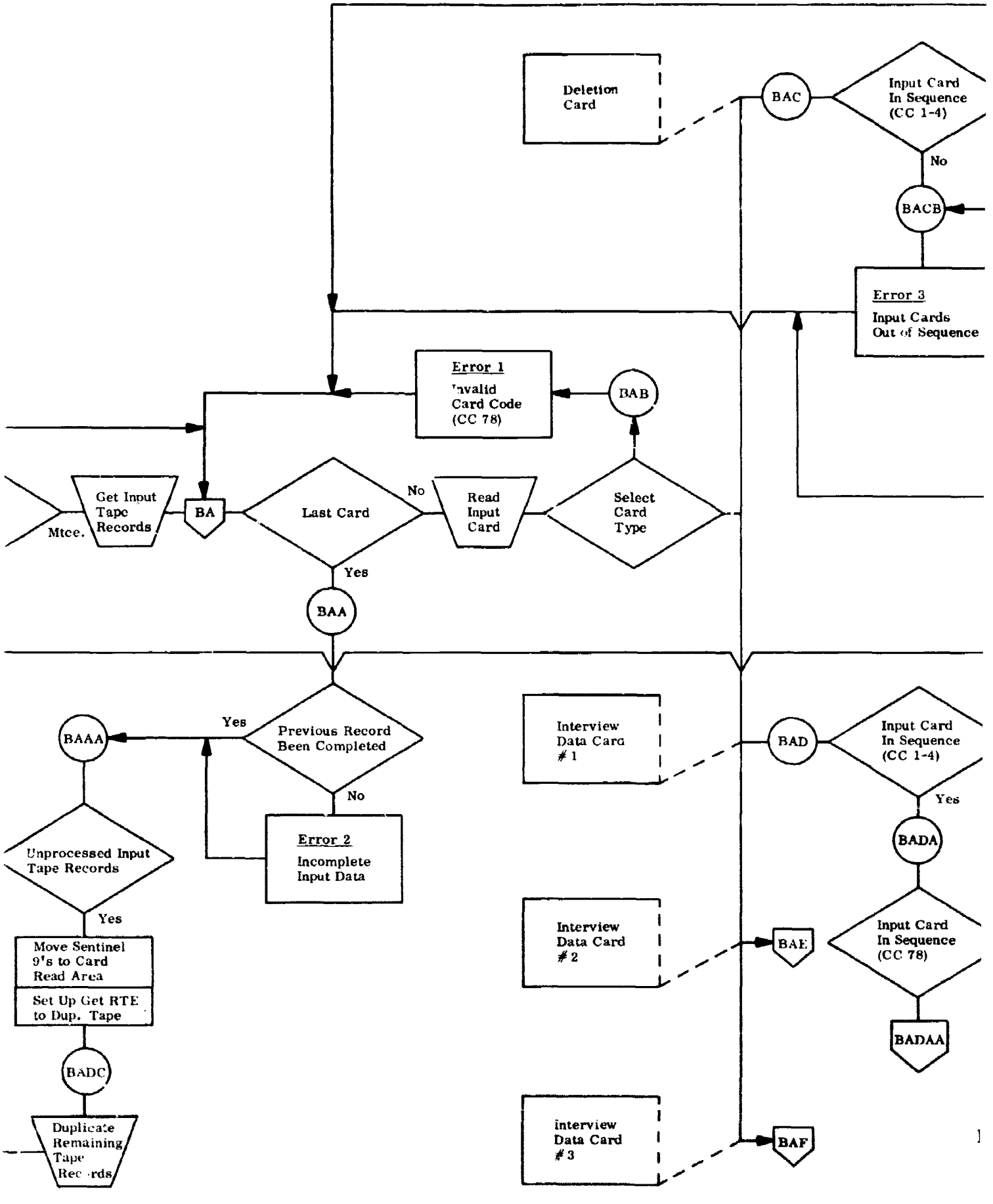
Deletion Card
BAC
Input Card In Sequence (CC 1-4)
No
BACB
Error 3
Input Cards Out of Sequence
Error 1
Invalid Card Code (CC 78)
BAB
Get Input Tape Records
Mtce.
BA
Last Card
No
Read Input Card
Select Card Type
Yes
BAA
Interview Data Card #1
BAD
Input Card In Sequence (CC 1-4)
Yes
BADA
Input Card In Sequence (CC 78)
BADAA
BAAA
Yes
Previous Record Been Completed
No
Error 2
Incomplete Input Data
Unprocessed Input Tape Records
Yes
Move Sentinel 9's to Card Read Area
Set Up Get RTE to Dup. Tape
BADC
Duplicate Remaining Tape Records
Interview Data Card #2
BAE
Interview Data Card #3
BAF

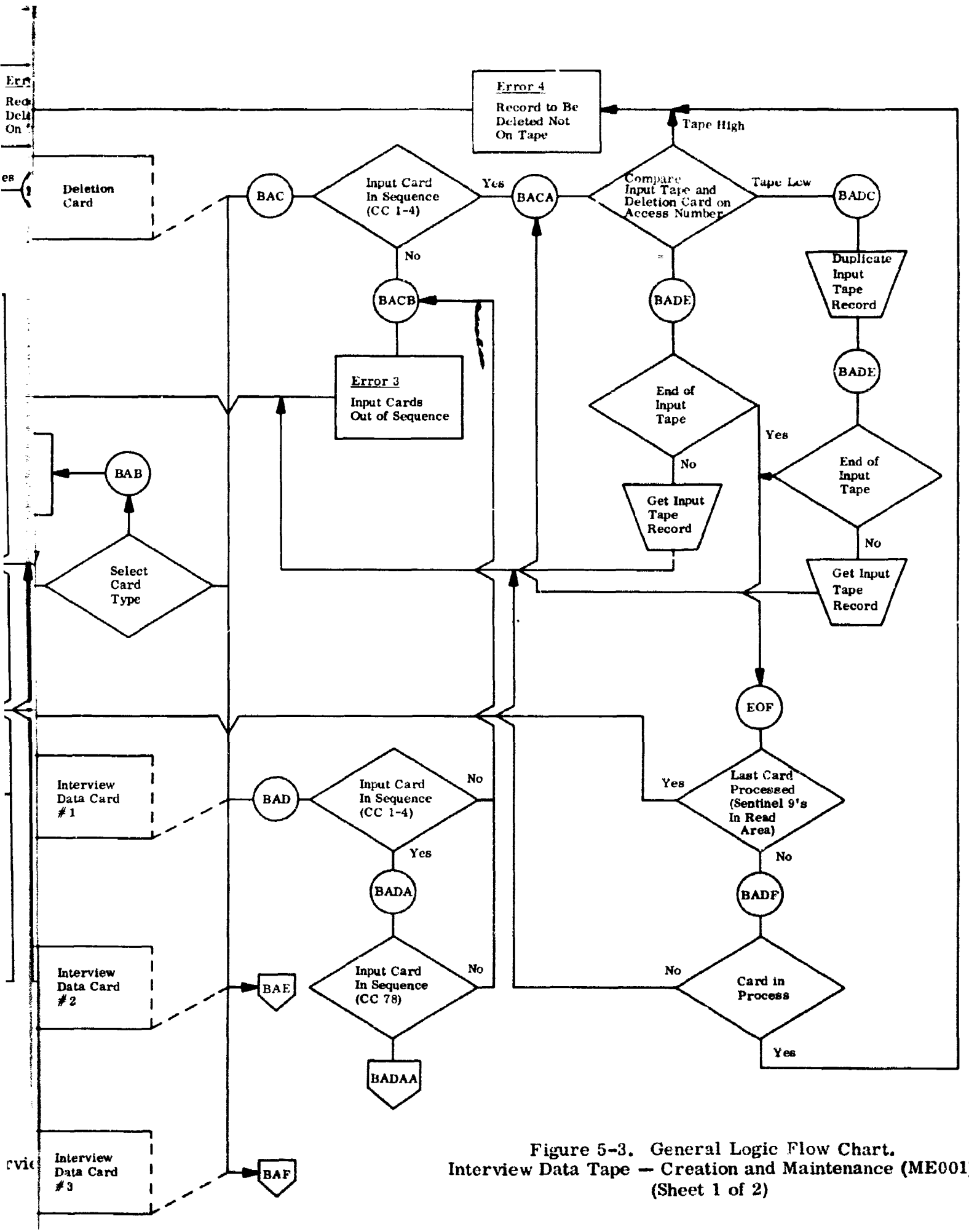

Figure 5-3. General Logic Flow Chart.
Interview Data Tape — Creation and Maintenance (ME001)
(Sheet 1 of 2)

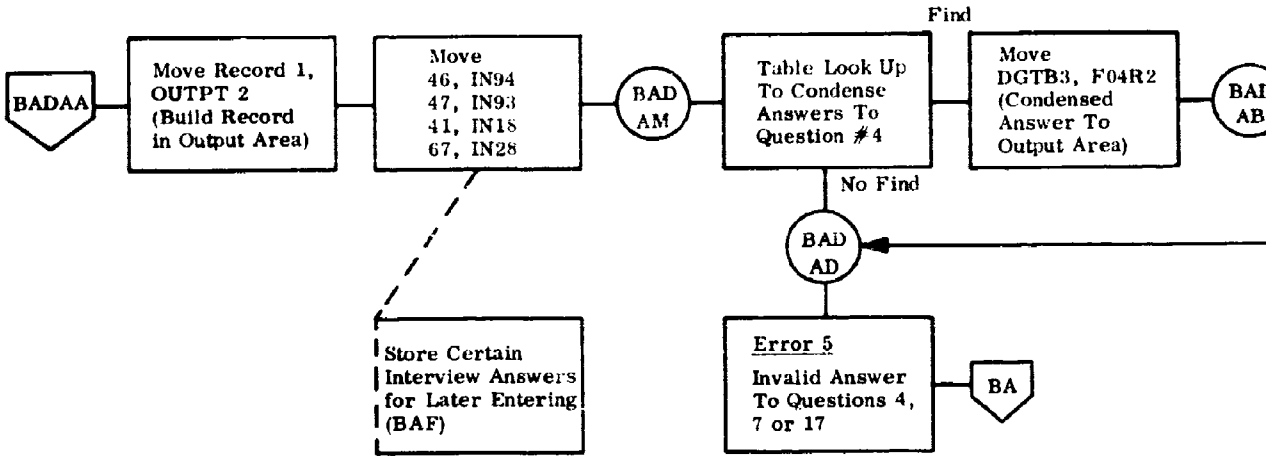

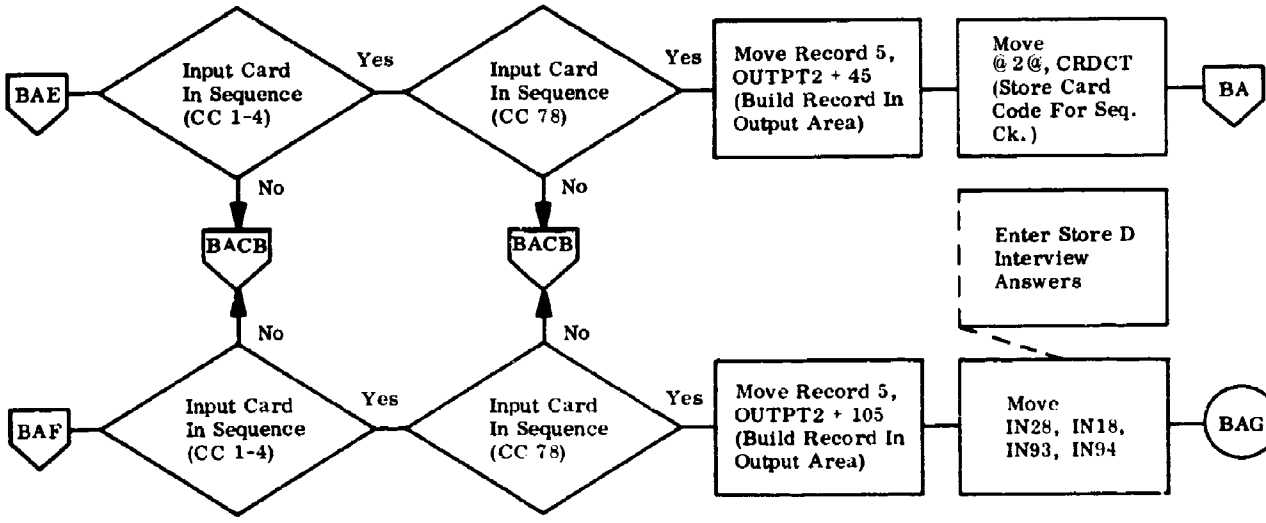

Note: Connectors ○ and ⬠

Refer to symbolic labels with appear in the program listing.

A

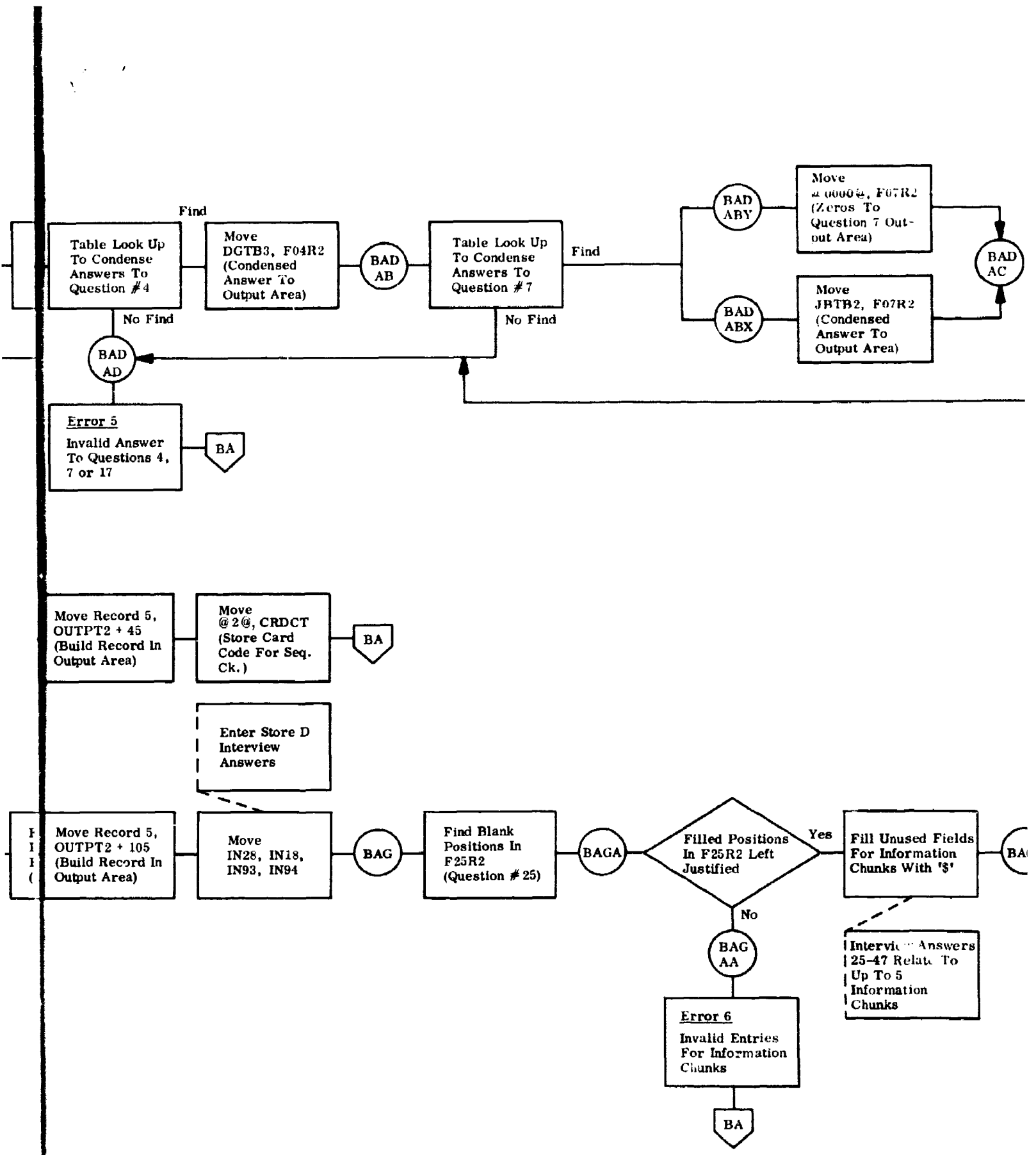
Find
Table Look Up To Condense Answers To Question #4
Move DGTB3, F04R2 (Condensed Answer To Output Area)
BAD AB
Table Look Up To Condense Answers To Question #7
Find
BAD ABY
Move @0000@, F07R2 (Zeros To Question 7 Output Area)
BAD ABX
Move JBTB2, F07R2 (Condensed Answer To Output Area)
BAD AC
No Find
No Find
BAD AD
Error 5
Invalid Answer To Questions 4, 7 or 17
BA
Move Record 5, OUTPT2 + 45 (Build Record In Output Area)
Move @2@, CRDCT (Store Card Code For Seq. Ck.)
BA
Enter Store D Interview Answers
Move Record 5, OUTPT2 + 105 (Build Record In Output Area)
Move IN28, IN18, IN93, IN94
BAG
Find Blank Positions In F25R2 (Question #25)
BAGA
Filled Positions In F25R2 Left Justified
Yes
Fill Unused Fields For Information Chunks With '$'
No
BAG AA
Interview Answers 25-47 Relate To Up To 5 Information Chunks
Error 6
Invalid Entries For Information Chunks
BA

Interv

B

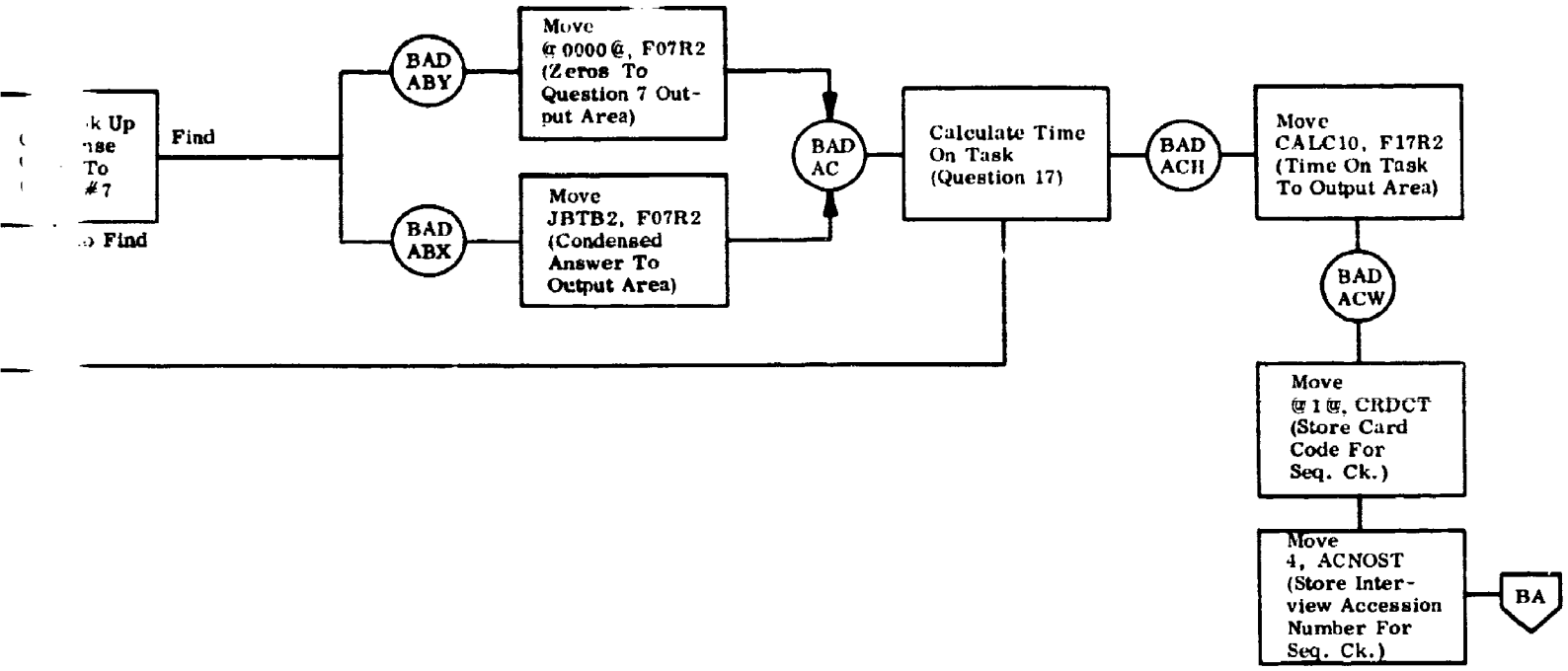

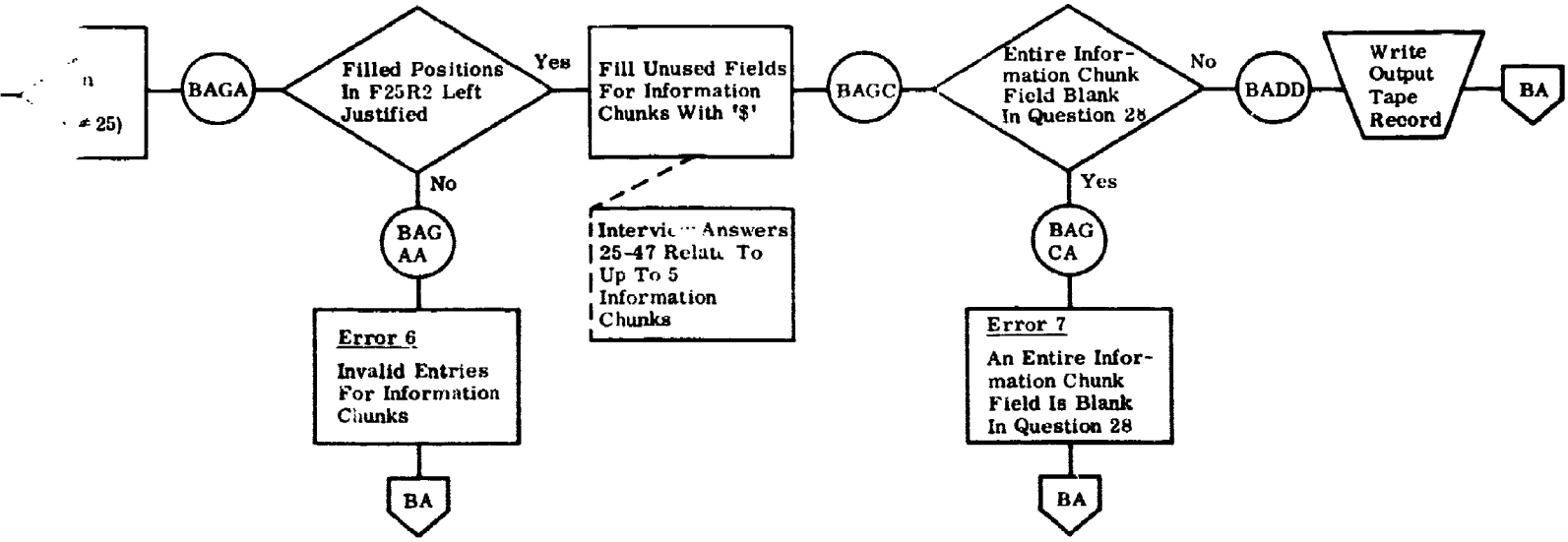

Figure 5-3. General Logic Flow Chart. Interview Data Tape — Creation and Maintenance (ME (Sheet 2 of 2)

Card Columns	Name of Field and Question Number for Analysis Purposes	Explanation and Question Number on Interview Guide
6-8	Question 98, Length of Interview	Always three digit numeric. This will be entered on the upper left of page one between time interview began and time interview ended.
9-12	Question 1, Military or GS Rating	Question 1, page one, always four alphanumeric characters.
13-14	Question 2, Year of Birth	Question 2, use only last two numeric digits of the year of birth.
15-16	Question 3, Number Supervised	Question 3, right justify and fill high-order zero. If three digits, punch 99.
17-19	Question 4, Highest Degree	Question 4, always three numeric.
20-21	Question 5, Year Obtained	Question 5, use only last two numeric digits of the year obtained. Leave blank if blank.
22-25	Question 7, MOS or Job Code	Question 7, always four numeric characters.
26-27	Question 8, Length of Time Doing This Type of Work	Question 8, always numeric, right justify and fill high-order zero.
28	Question 9, Type of Activity	Question 9, always one alpha character.
29	Question 10, Kind	Question 10, always one alpha character.
30-31	Question 11, Field	Question 11, always numeric, right justify and fill high-order zero.
32-33	Question 12, Field	Question 13, page 2, FIRST BLOCK always numeric, if one digit, right justify and fill high-order zero.
34-35	Question 13, Section	Question 13, SECOND BLOCK always numeric, if one digit, right justify and fill high-order zero.
	(Questions 12 & 13 may be combined as Question 96 for purposes of analysis)	
36	Question 14	Question 14, always one alpha character.
37	Question 15, Task Assigned	Question 15, always one alpha character, A or B.

Card Columns	Name of Field and Question Number for Analysis Purposes	Explanation and Question Number on Interview Guide
38	Question 16, Task Not Assigned	Question 16, always one alpha character, A, B, or C. If blank, leave blank.
39	Question 17	Question 17, FIRST BLOCK one numeric digit. If two digits, punch 9.
40		Question 17, SECOND BLOCK one alpha character.
41		Question 18, page 3, one alpha character.
42	Question 20, Task Output	Question 20, one alpha character, A, B, or C.
43	Question 21, Task Output	Question 21, one alpha character, A, B, or C.
44	Question 22, Task Output	Question 22, one alpha character, A or B.
45	Question 23, Task Output	Question 23, one alpha character, A or B.
46	Question 94	Question 94, one alpha character, or blank.
47	Question 93	Question 93, numeric character or blank.
48-67	Question 28	Question 28 includes five fields of four characters each. Each field may have up to four alphabetic characters or blanks.
68-77		Leave blank.
78	Card Code	Autoduplicate "1".
79-80	Project Code	Autoduplicate "ME".
	INTERVIEW DATA CARD NO. 2	
1-4	Interview Accession Number	Always a four digit number stamped on the upper right hand corner of page 5 of the Interview Guide.

Card Columns	Name of Field and Question Number for Analysis Purposes	Explanation and Question Number on Interview Guide
5-9	Question 25, Five Classes	Question 25, page 5, leave blanks where they occur, FIRST ROW of five boxes, alpha only.
10-19	Question 26, Five Fields	Question 25, there are five, two-digit fields in the SECOND ROW of five boxes, right justify within each box, fill high-order zero, each box will contain no more than two numeric characters, leave two blanks when a box is completely blank.
20-29	Question 27, Five Sections	Question 25, there are five, two-digit fields in the THIRD ROW of five boxes, right justify and fill high-order zero within each box, each box will contain no more than two numeric characters, leave two blanks when a box is completely blank.
	(Questions 26 & 27 may be combined as Question 97 for analysis purposes.)	
30-34	Question 29, Habitual Media	Question 27, alpha only A, B, or C. When a blank is in the box, leave the card column blank.
35-39	Question 31	Question 29, page 6, alpha only, leave blanks where they occur.
40-44	Question 32	Question 30, alpha only, A, B, C, or D, leave blanks where they occur.
45-49	Question 33	Question 31, alpha only, A, B, or C, leave blanks where they occur.
50-54	Question 34	Question 32, page 7, alpha only, leave blanks where they occur.
55-59	Question 35	Question 33, alpha only, leave blanks where they occur.
60-64	Question 36	Question 34, alpha only, leave blanks where they occur.
65-77		Leave blank.
78	Card Code	Autoduplicate "2".
79-80	Project Code	Autoduplicate "ME".

AUERBACH ®

Card Columns	Name of Field and Question Number for Analysis Purposes	Explanation and Questions Number on Interview Guide
	INTERVIEW DATA CARD NO. 3	
1-4	Interview Accession Number	Always a four digit number stamped on the upper right hand corner of page 7.
5-9	Question 37	Question 35, alpha only, A, B, or C, leave blanks where they occur.
10-14	Question 38	Question 36, alpha only, A, B, C, or D, leave blanks where they occur.
15-19	Question 39	Question 37, alpha only, A, B, or C, leave blanks where they occur.
20-24	Question 40	Question 38, alpha only, page 8, leave blanks where they occur.
25-29	Question 41	Question 39, alpha only, leave blanks where they occur.
30-34	Question 42	Question 40, alpha only, leave blanks where they occur.
35-39	Question 43	Question 41, alpha only, leave blanks where they occur.
40-44	Question 45	Question 43, page 9, alpha only, leave blanks where they occur.
45-49	Question 46	Question 44, page 9, alpha only, A or B, leave blanks where they occur.
50-54	Question 47	Question 45, page 10, alpha only, leave blanks where they occur.
55	Question 48	Question 46, A or B only.
56	Question 49	Question 1, page 11 (Part III) alpha only.
57	Question 50	Question 2, alpha only, leave blanks where they occur.
58	Question 51	Question 3, alpha only.
59	Question 52	Question 4, alpha only, leave blanks where they occur.

Card Columns	Name of Field and Question Number for Analysis Purposes	Explanation and Question Number on Interview Guide
60	Question 53	Question 5, alpha only.
61	Question 54	Question 6, alpha only
62	Question 56	Question 1, page 12 (Part IV) alpha only.
63	Question 59	Question 1, page 12 (Part V) alpha only.
64-66	Question 95	Question 95, numeric only, right justified, leave high order blanks.
67-77		Leave blank.
78	Card Code	Autoduplicate "3".
79-80	Project Code	Autoduplicate "ME".

DELETION CARD

1-4	Interview Accession Number	Punch the accession number of the interview to be deleted.
78	Card Code	Always "0" (zero).
79-80	Project Code	Always "ME".

(2) Output Data Description

The Interview Data Tape is the output (also see Figure 5-2):

Positions	Name of Field
1-45	Same as columns 1-45 of Interview Data Card #1, Paragraph 2.2. Except columns 39-41 which indicate days on project on Interview Data Tape.
46-105	Same as columns 5-64 of Interview Data Card #2, Paragraph 2.2.
106-167	Same as columns 5-66 of Interview Data Card #3, Paragraph 2.2.
168-169	Same as columns 46-47 of Interview Data Card #1, Paragraph 2.2.

AUERBAC

Positions	Name of Field
170	Same as column 41 of Interview Data Card #1, Paragraph 2.2.
171-190	Same as columns 48-67 of Interview Data Card #1 Paragraph 2.2.
191-200	Blank.

(3) Operator Instructions

(a) Program Title and Number

INTERVIEW DATA TAPE-CREATION AND MTCE (ME001).

(b) Tapes

Input - Interview Data Tape on Tape Drive 2 (only for file maintenance, not for file creation).

Output - Interview Data Tape on Tape Drive 3.
Unreadable record dump tape on Tape Drive 1.

(c) Cards - Input

(i) Date Card. The Date Card is placed before the object program deck before the EX Card (0102 in card columns 72-75).

(ii) RDLIN Card (ReaD Label INformation). Do not use a RDLIN Card for an original file creation run.

For a file maintenance run, insert the RDLIN Card after the first EX Card (0102 in card columns 72-75) in the object program deck. The format of the RDLIN Card follows:

Card Columns	Explanation and Description
16-20	Always "RDLIN".
21-29	Always "00000-001" (numeric).
30	Leave blank.
31-40	Always "INTERDATAP".
41-45	Five digits (two for year, three for day) for date on which input tape was created.
46-49	Always "-021" (retention cycle).

(iii) Interview Data Cards. These cards are stacked behind the object program deck and will fall into the normal stacker after they are read.

The card code is "ME" in card columns 79-80. The cards are sequenced as follows:

Major Field

Card columns 1-4 Interview Accession Number.

Minor Field

Card column 78 Card Code.

(d) Sense Switches

(i) I/O, A, and B-ON, for initial file creation.

(ii) I/O and A-ON, for file maintenance.

(4) Programmed Error Instructions

(a) Error 1 (ER01)

(i) Printout: Input card in error.

(ii) Condition: Card code (column 78) is something other than a 0 (zero), 1, 2, or 3, or project code (columns 79 and 80) is something other than 'ME'.

(iii) Programmed action: None of the data from cards having the same interview accession number as the erroneous card are put on the output magnetic tape. The cards which have the same interview accession number and which also have a sequentially higher card code will appear as out-of-sequence, Error 3.

(iv) Corrective action: Correct the card with the erroneous card code or project code and enter the corrected card with all other cards having the same interview accession number in a subsequent run.

(b) Error 2 (ER02)

(i) Printout: The first 80 positions of the incomplete output record which could not be processed are printed.

(ii) Condition: Less than three input cards all with the same interview accession number were entered.

AUERBACH ®

(iii) Programmed action: The incomplete output tape record is not processed to the output tape.

(iv) Corrective action: Enter in a subsequent run all three input cards for the interview, whose data were not processed.

(c) Error 3 (ER03)

(i) Printout: First line contains the four digit accession number either of the last processed interview data or of the interview data in process when the out-of-sequence card was read. Second line contains the contents of the out-of-sequence card.

(ii) Condition: Input cards entering the system are not in ascending sequence by interview accession number or within interview accession number (columns 1-4); the cards are not in unbroken sequence by card code (column 78).

(iii) Programmed action: Data from the out-of-sequence cards are not processed to the output tape.

(iv) Corrective action: Same as for Error 2.

(d) Error 4 (ER04)

(i) Printout: Contents of deletion card.

(ii) Condition: Record to be deleted from Interview Data Tape is not on the tape.

(iii) Programmed action: None.

(iv) Corrective action: Correct the interview accession number specified in the deletion card and enter the card in a subsequent run.

(e) Error 5 (ER05)

(i) Printout: Input card in error.

(ii) Condition: Invalid answer given for Interview Question #4, #7, or #17.

(iii) Programmed action: Data for the interview having the same interview accession number as the erroneous card is not processed to the output tape.

(iv) Corrective action: Correct the erroneous card and enter in a subsequent run the three input cards for the interview whose data were not processed.

(f) Error 6 (ER06)

(i) Printout: First 80 positions of the output record in error.

(ii) Condition: Answers to Question #25 are not packed to the left.

(iii) Programmed action: The output record is not processed to the output magnetic tape.

(iv) Corrective action: Pack to the left the answers to the Question #25 in the erroneous input card and enter in a subsequent run the three input cards for the interview whose data were not processed.

(g) Error 7 (ER07)

(i) Printout: Same as for Error 6.

(ii) Condition: In Question #28, four blanks are in a field corresponding to one of the filled fields in Question #25.

(iii) Programmed action: Same as for Error 6.

(iv) Corrective action: In Question #28 in Interview Data Card #1, enter at least one alphabetic character in each four character field which corresponds to each filled field in Question #25. In a subsequent run, enter the three input cards for the interview whose data were not processed.

5.8 COMPUTER RUN TO ANALYZE THE DATA ON THE INTERVIEW DATA TAPE

This computer run analyzes the data on the Interview Data Tape according to the specifications contained in the inquiry cards. The program produces a record on the output tape to store the results of matching each inquiry against the data for each interview on the Interview Data Tape. See Figure 5-4 for general logic flowchart.

The program to analyze the Interview Data Tape can operate on the following types of inquiries:

(1) Frequency Distribution Inquiries

(a) Simple frequency distribution. The frequency of occurrence of each answer to a single specified interview question can be obtained.

(b) Two-level frequency distribution. The frequency with which each answer to one specified question occurs in conjunction with each answer to another specified question on the same interview can be obtained.

(c) Three-level frequency distribution. The frequency with which each answer to one specified question occurs in conjunction with each answer to another specified question and in conjunction with each answer to a third specified question, can be obtained.

(2) Intersection Inquiries

The interview accession numbers can be obtained for each interview which has (or in the case of logical negation, does not have) the specified answers to each of one, two, or three specified questions. The total number of interviews meeting the specifications is given.

(3) Combination of Intersection and Frequency Distribution Inquiries

A simple frequency distribution of the answers to a specified interview question can be obtained for all interviews which have (or, in the case of logical negation, do not have) specified answers to each of one or two questions.

A special restriction exists for Questions #96 and #97, which are combinatio of Questions #12 and #13, and Questions #26 and #27, respectively. These can only b specified in a simple frequency distribution inquiry.

Up to 200 inquiries of any type can be accommodated in a single computer ru but when a large number of inquiries is entered, the time of the runs should be conside for scheduling purposes.

(1) Input Data Description

(a) Interview Data Tape. Format is given in Item (2) under Paragraph 5.6.

(b) Inquiry Cards. Each card may accommodate up to three inquiries. When less than three inquiries are entered in a card, the inquiries must be packed to the left in the fields provided. These cards must be keypunched according to the following specifications (also see Figure 5-5).

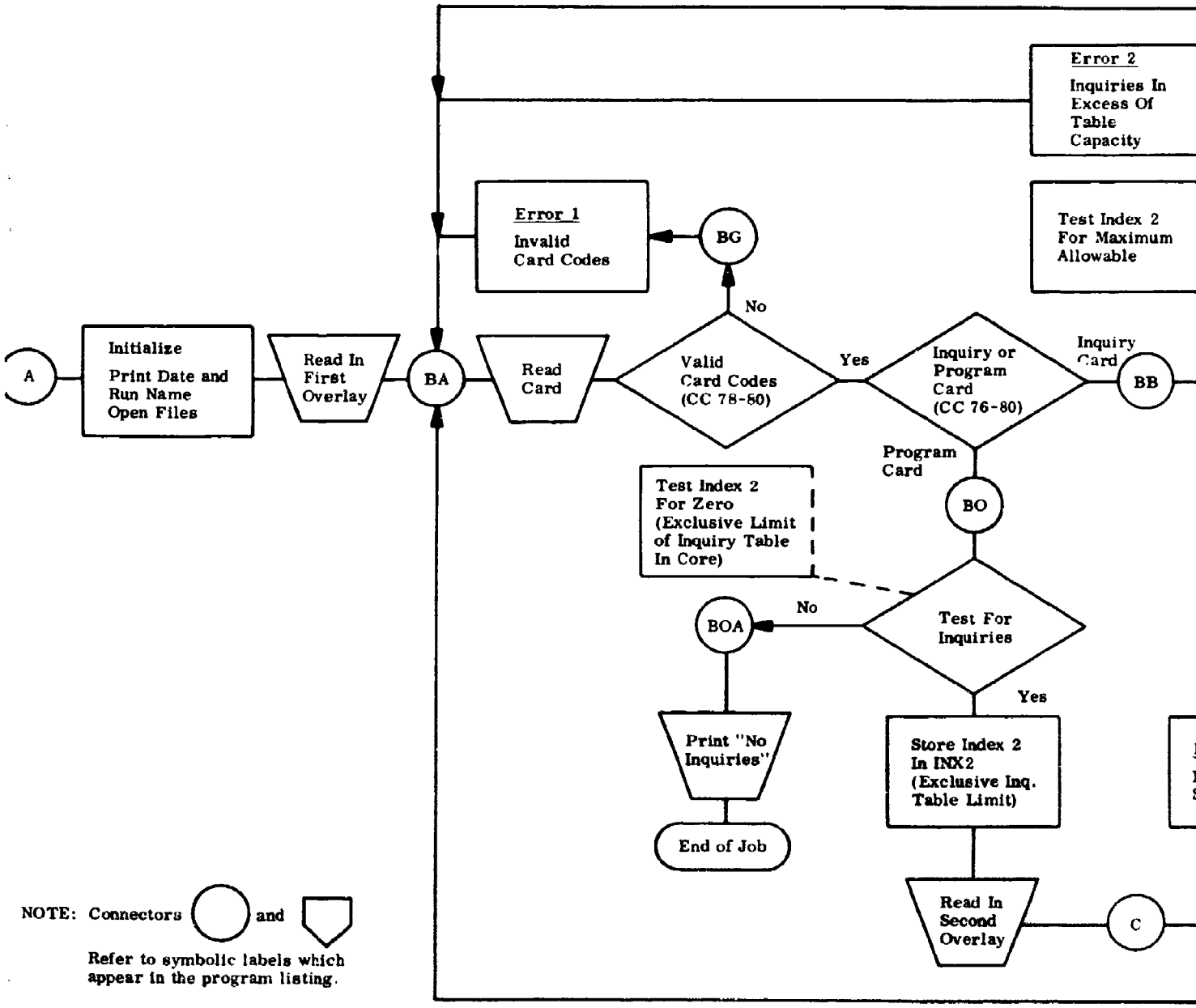

NOTE: Connectors ○ and ⬠

Refer to symbolic labels which appear in the program listing.

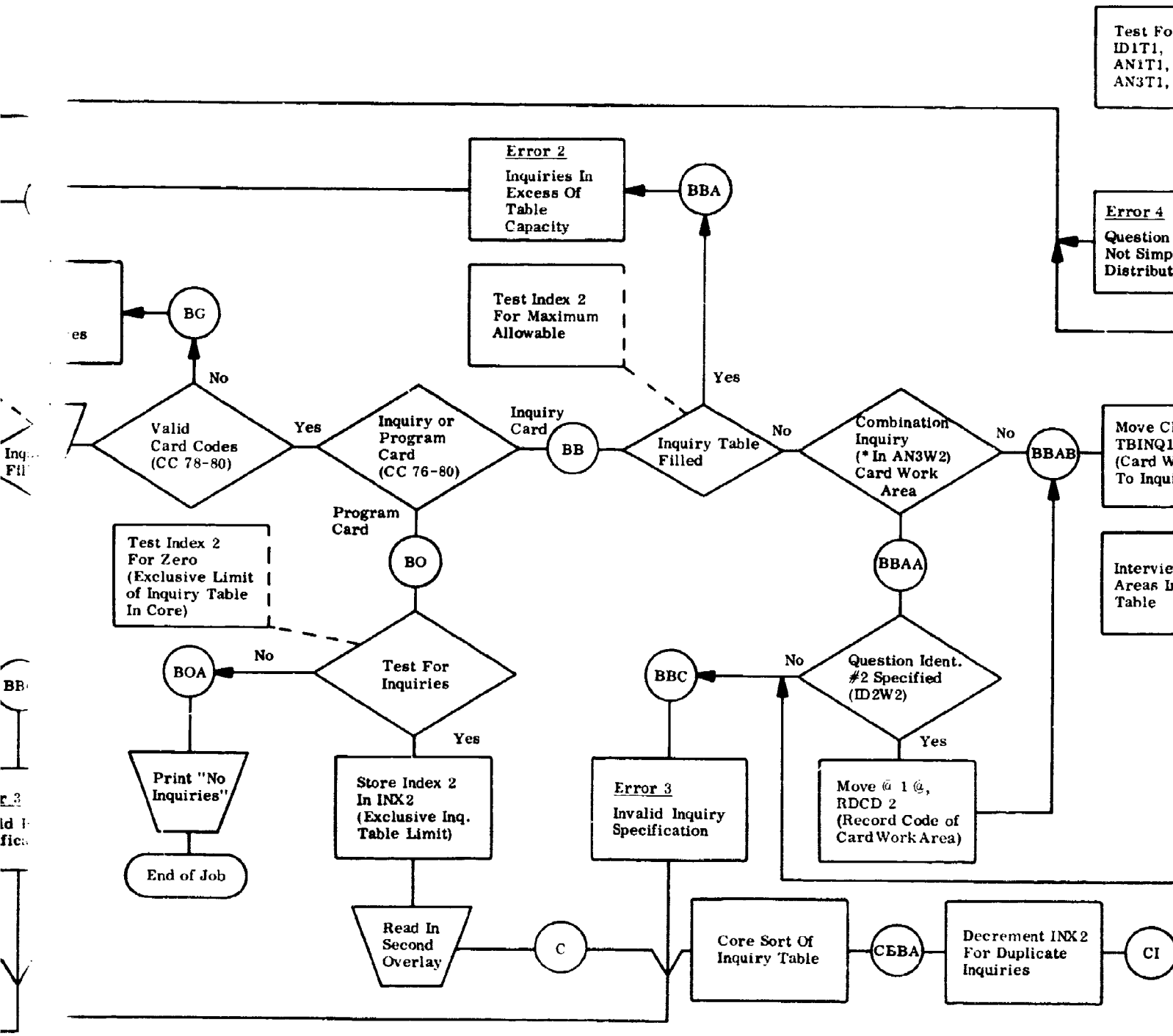
Test Fo
ID1T1,
AN1T1,
AN3T1,
Error 2
Inquiries In Excess Of Table Capacity
BBA
Error 4
Question
Not Simp
Distribut
Test Index 2 For Maximum Allowable
BG
es
No
Yes
Valid Card Codes (CC 78-80)
Yes
Inquiry or Program Card (CC 76-80)
Inquiry Card
BB
Inquiry Table Filled
No
Yes
Combination Inquiry (* In AN3W2) Card Work Area
No
BBAB
Move C
TBINQ1
(Card W
To Inqui
Program Card
BO
BBAA
Test Index 2 For Zero (Exclusive Limit of Inquiry Table In Core)
Intervie
Areas I
Table
BOA
No
Test For Inquiries
BBC
No
Question Ident. #2 Specified (ID2W2)
Yes
Yes
Print "No Inquiries"
Store Index 2 In INX2 (Exclusive Inq. Table Limit)
Error 3
Invalid Inquiry Specification
Move @ 1 @, RDCD 2 (Record Code of Card Work Area)
End of Job
Read In Second Overlay
C
Core Sort Of Inquiry Table
CBBA
Decrement INX2 For Duplicate Inquiries
CI

B

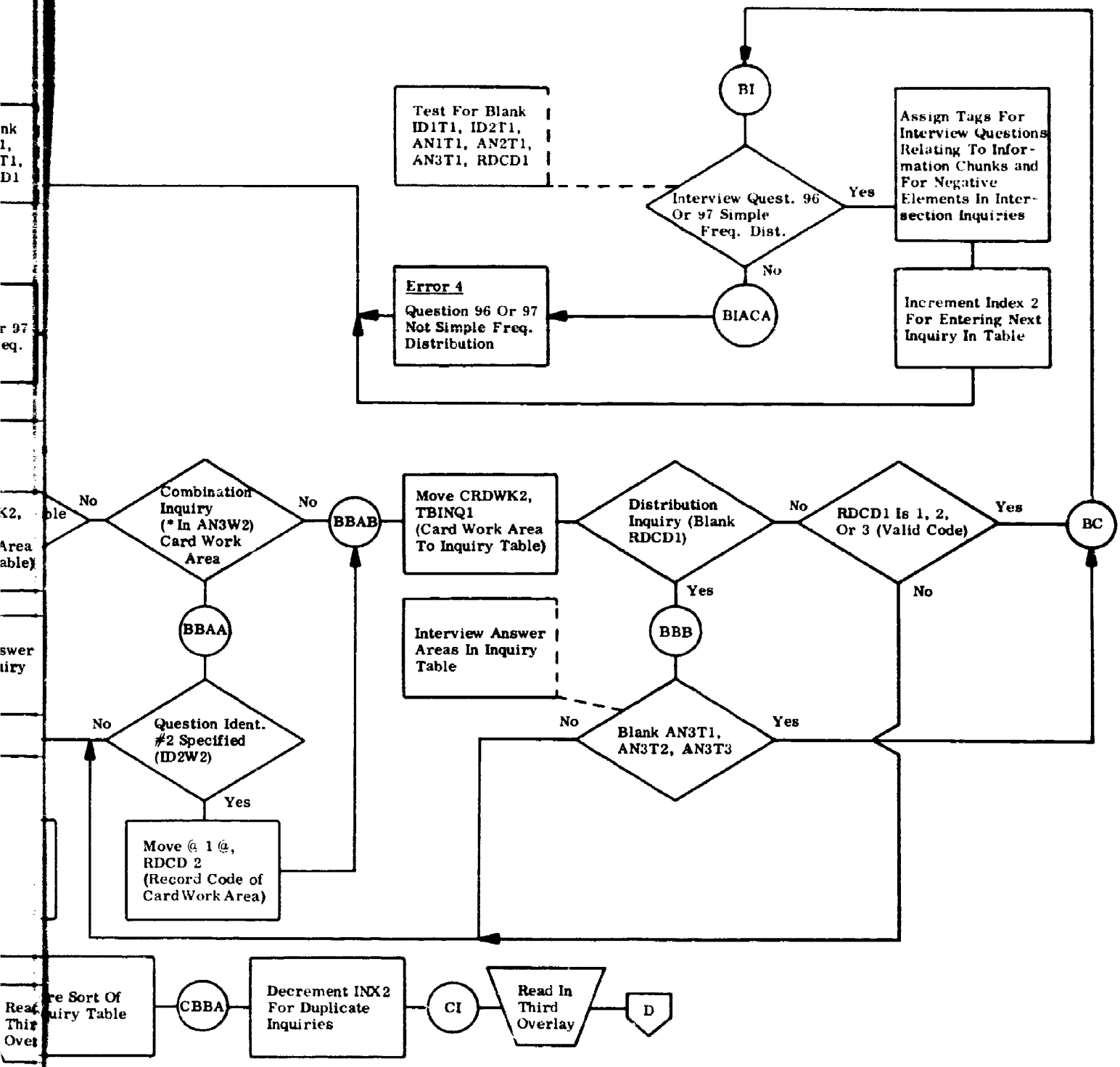

Figure 5-4. General Logic Flow Chart. Interview Data Tape — Analysis (ME002) (Sheet 1 of 5)

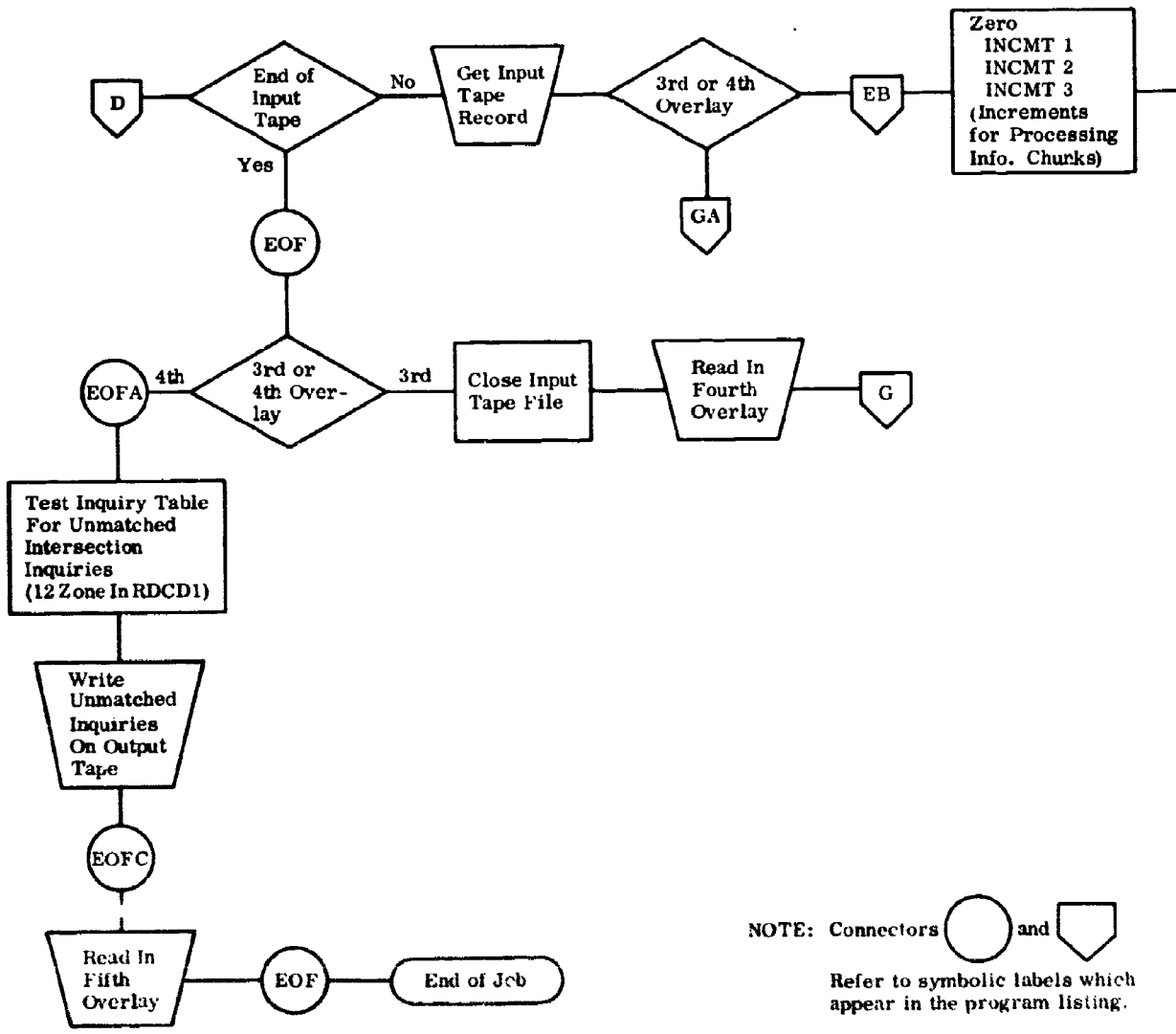
D
End of Input Tape
No
Get Input Tape Record
3rd or 4th Overlay
EB
Zero
INCMT 1
INCMT 2
INCMT 3
(Increments for Processing Info. Chunks)
GA
Yes
EOF
EOFA
4th
3rd or 4th Over-lay
3rd
Close Input Tape File
Read In Fourth Overlay
G
Test Inquiry Table For Unmatched Intersection Inquiries (12 Zone In RDCD1)
Write Unmatched Inquiries On Output Tape
EOFC
Read In Fifth Overlay
EOF
End of Job
NOTE: Connectors and
Refer to symbolic labels which appear in the program listing.

A

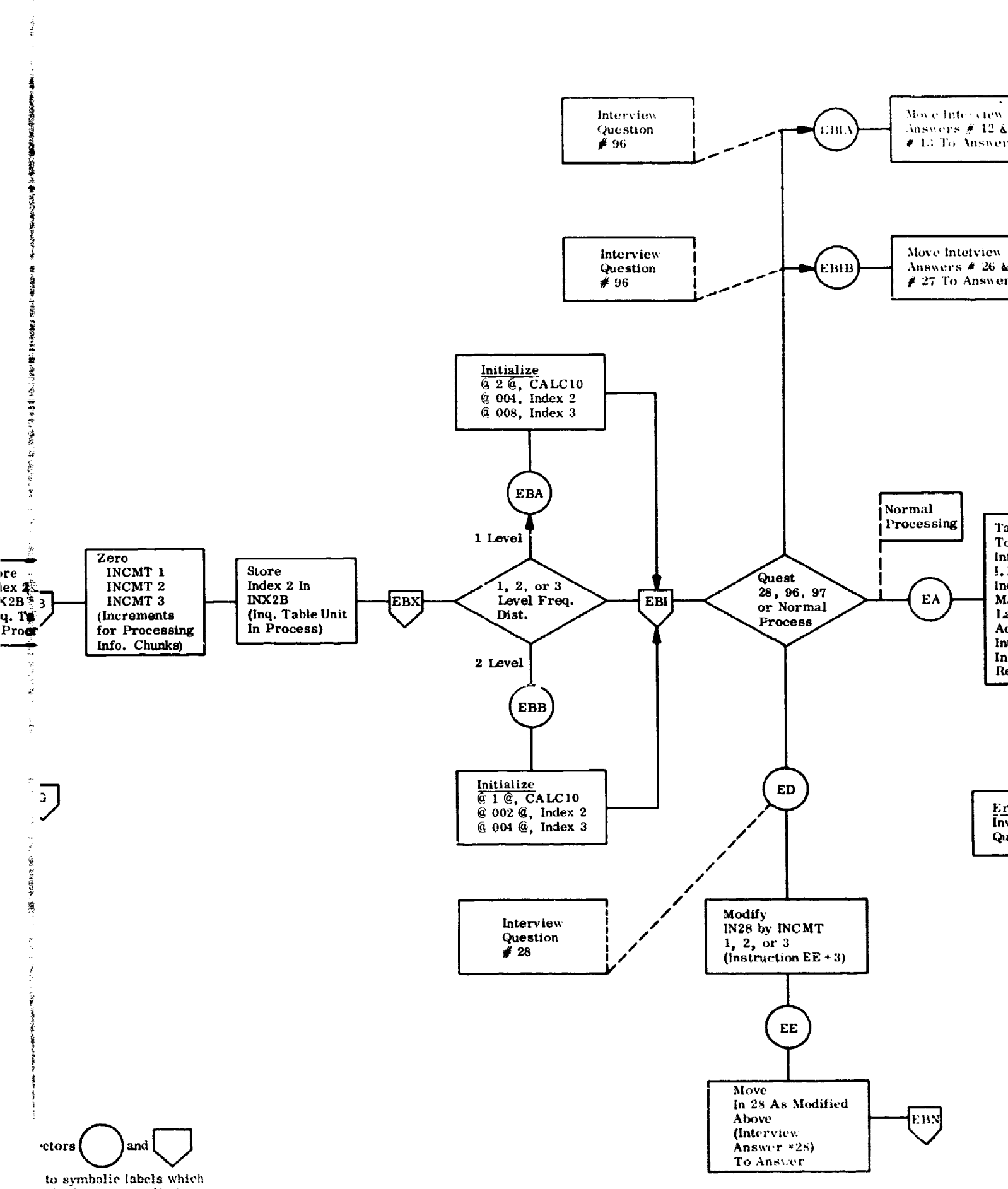

ectors and

to symbolic labels which
r in the program listing.

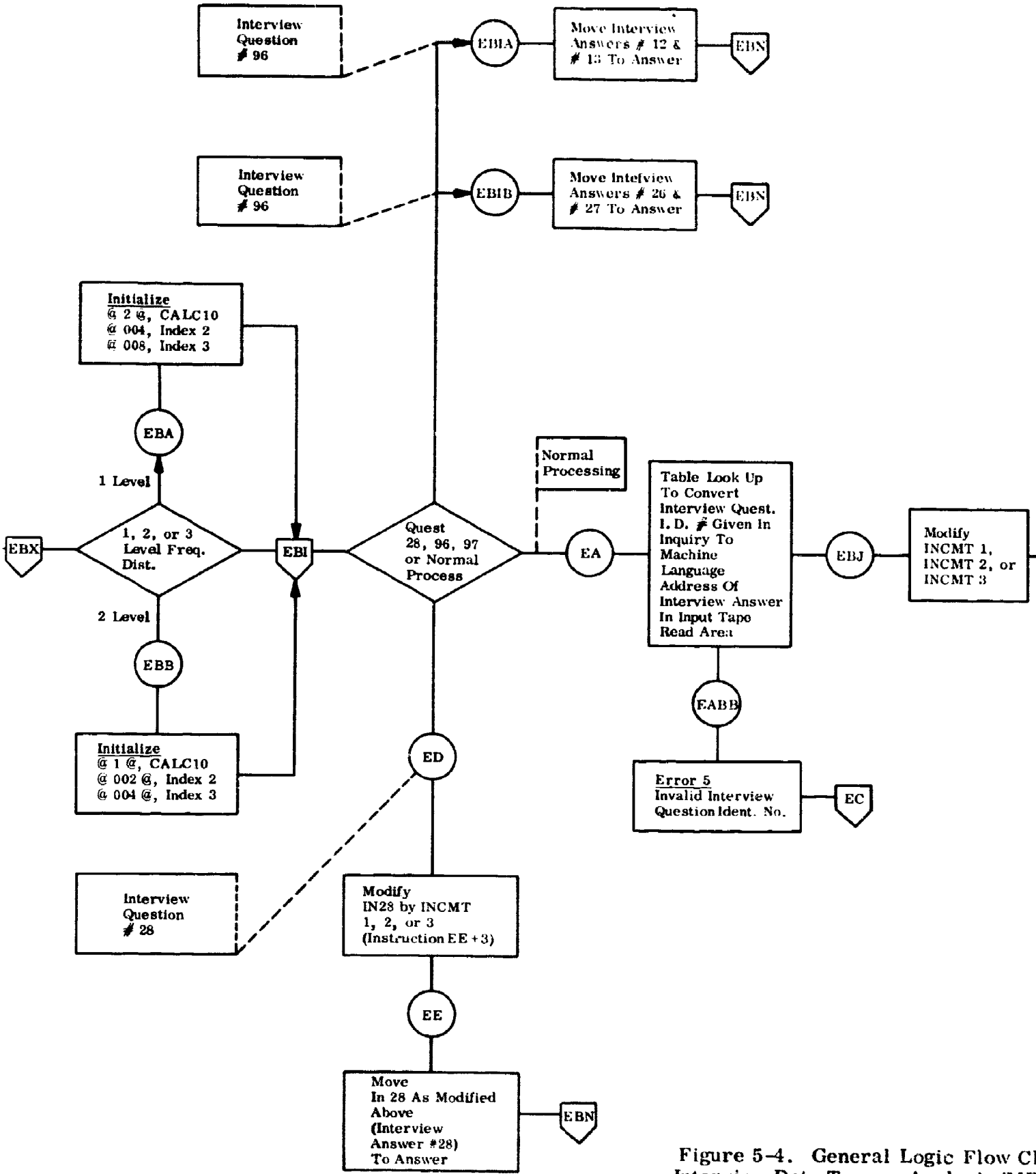

Figure 5-4. General Logic Flow Cl
Interview Data Tape — Analysis (ME
(Sheet 2 of 5)

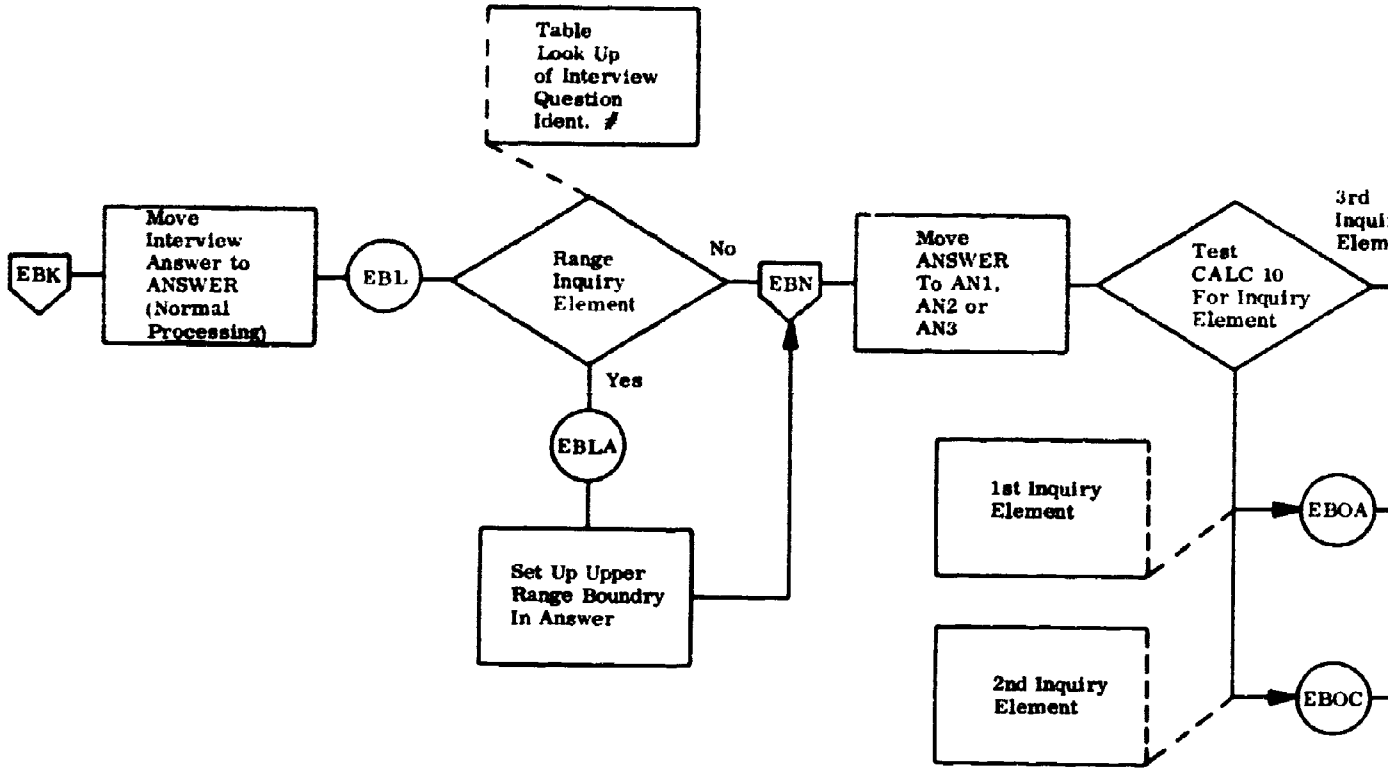

NOTE: Connectors ○ and ⬠

Refer to symbolic labels which appear in the program listing.

EBK

t.
2)

65

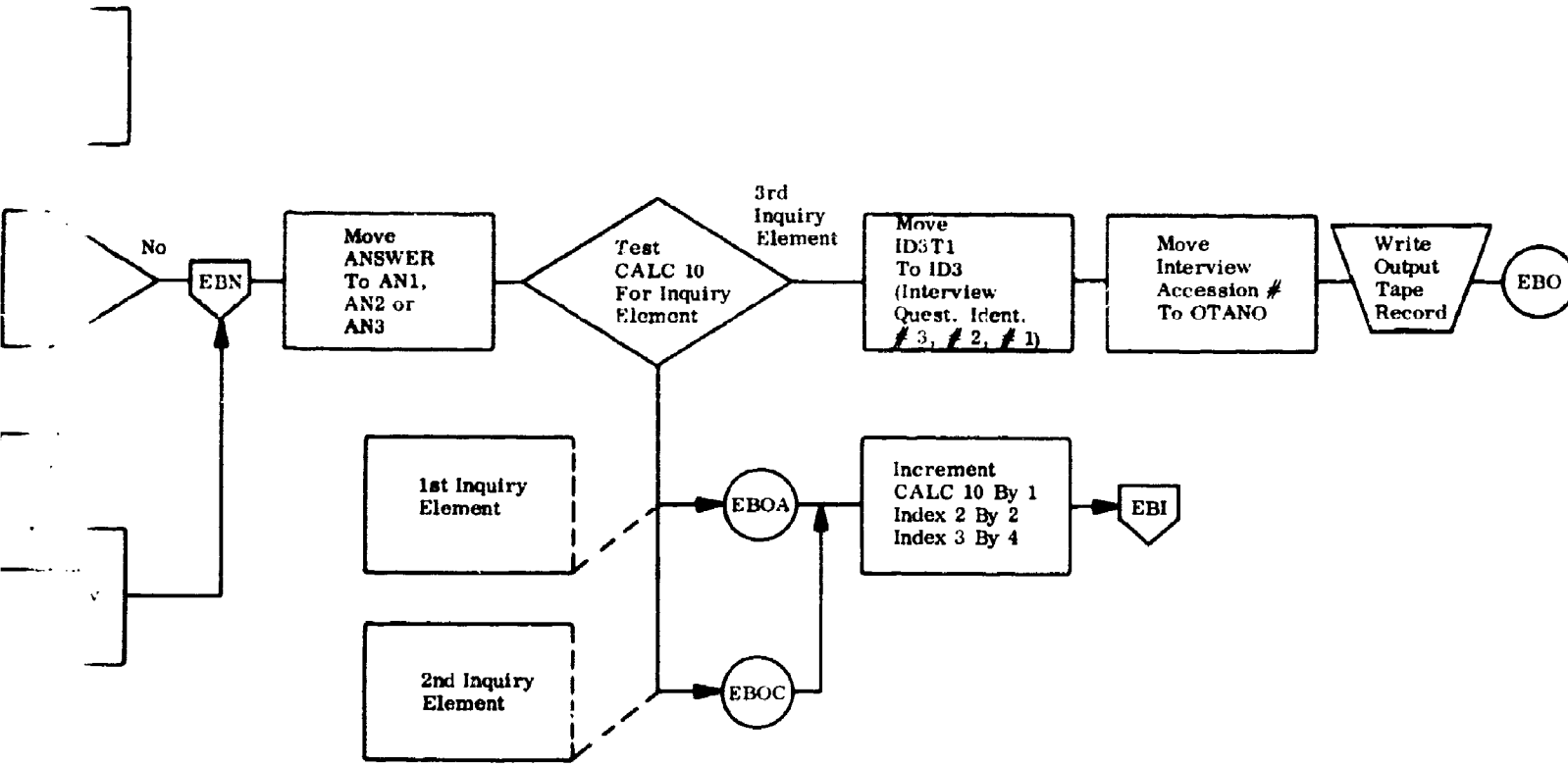
No
EBN
Move
ANSWER
To AN1,
AN2 or
AN3
Test
CALC 10
For Inquiry
Element
3rd
Inquiry
Element
Move
ID3T1
To ID3
(Interview
Quest. Ident.
3, # 2, # 1)
Move
Interview
Accession #
To OTANO
Write
Output
Tape
Record
EBO
1st Inquiry
Element
EBOA
Increment
CALC 10 By 1
Index 2 By 2
Index 3 By 4
EBI
2nd Inquiry
Element
EBOC

B

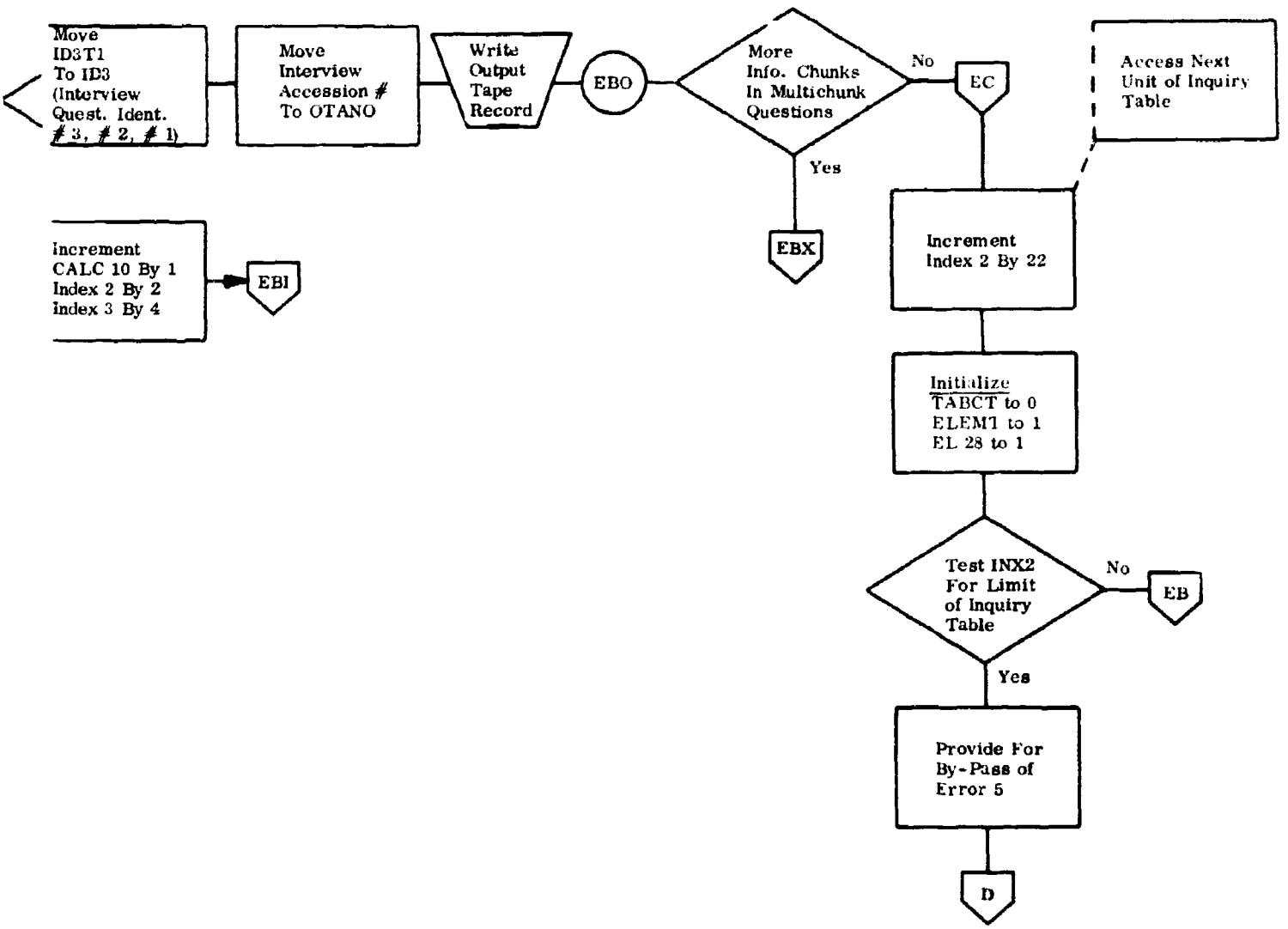

Figure 5-4. General Logic Flow Chart. Interview Data Tape — Analysis (ME002) (Sheet 3 of 5)

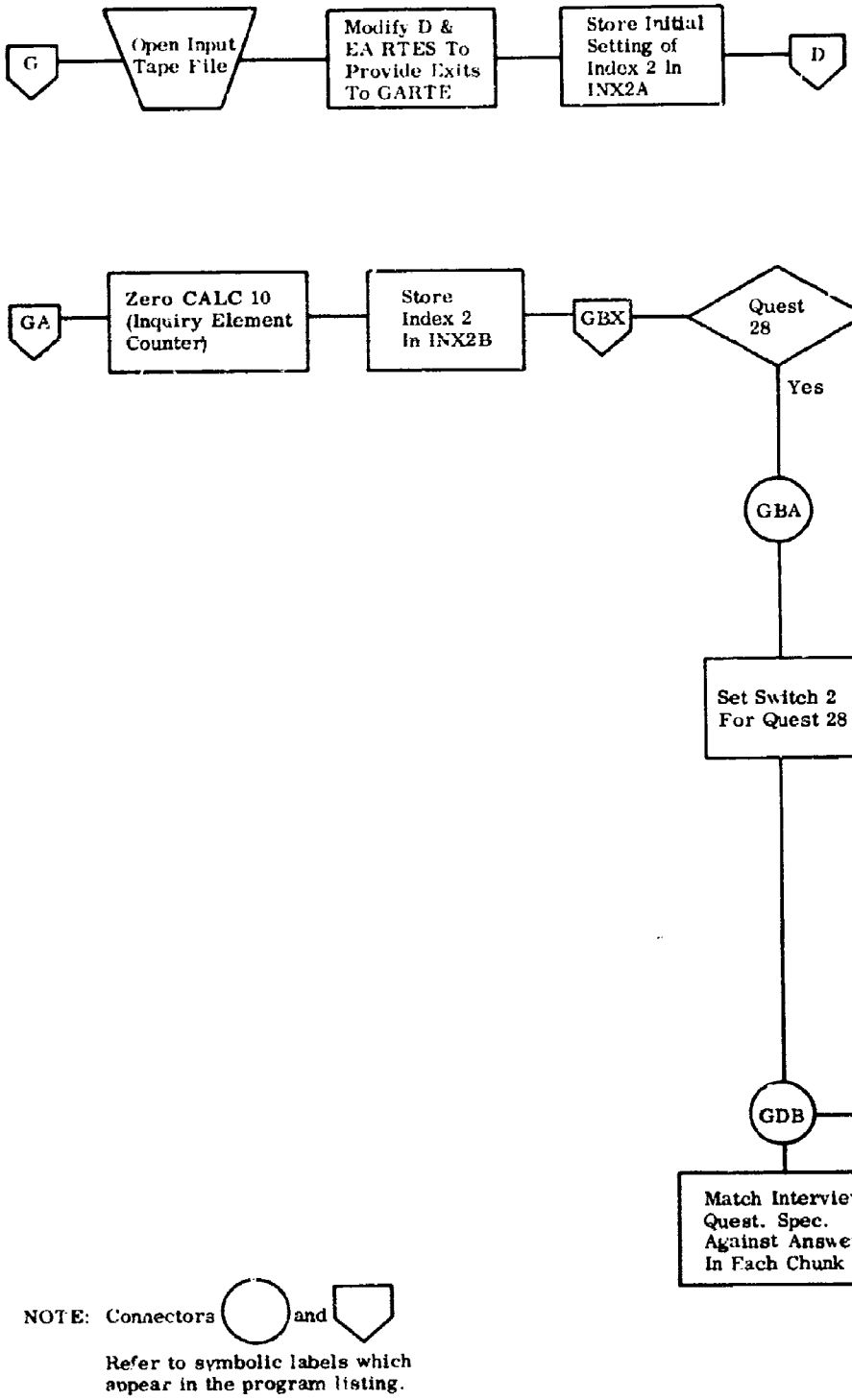
G
Open Input Tape File
Modify D & EA RTES To Provide Exits To GARTE
Store Initial Setting of Index 2 In INX2A
D
GA
Zero CALC 10 (Inquiry Element Counter)
Store Index 2 In INX2B
GBX
Quest 28
No
EA
Yes
GBA
Set Switch 2 For Quest 28
GDB
Match Interview Quest. Spec. Against Answers In Each Chunk
Match
Yes
GM
NOTE: Connectors and
Refer to symbolic labels which appear in the program listing.

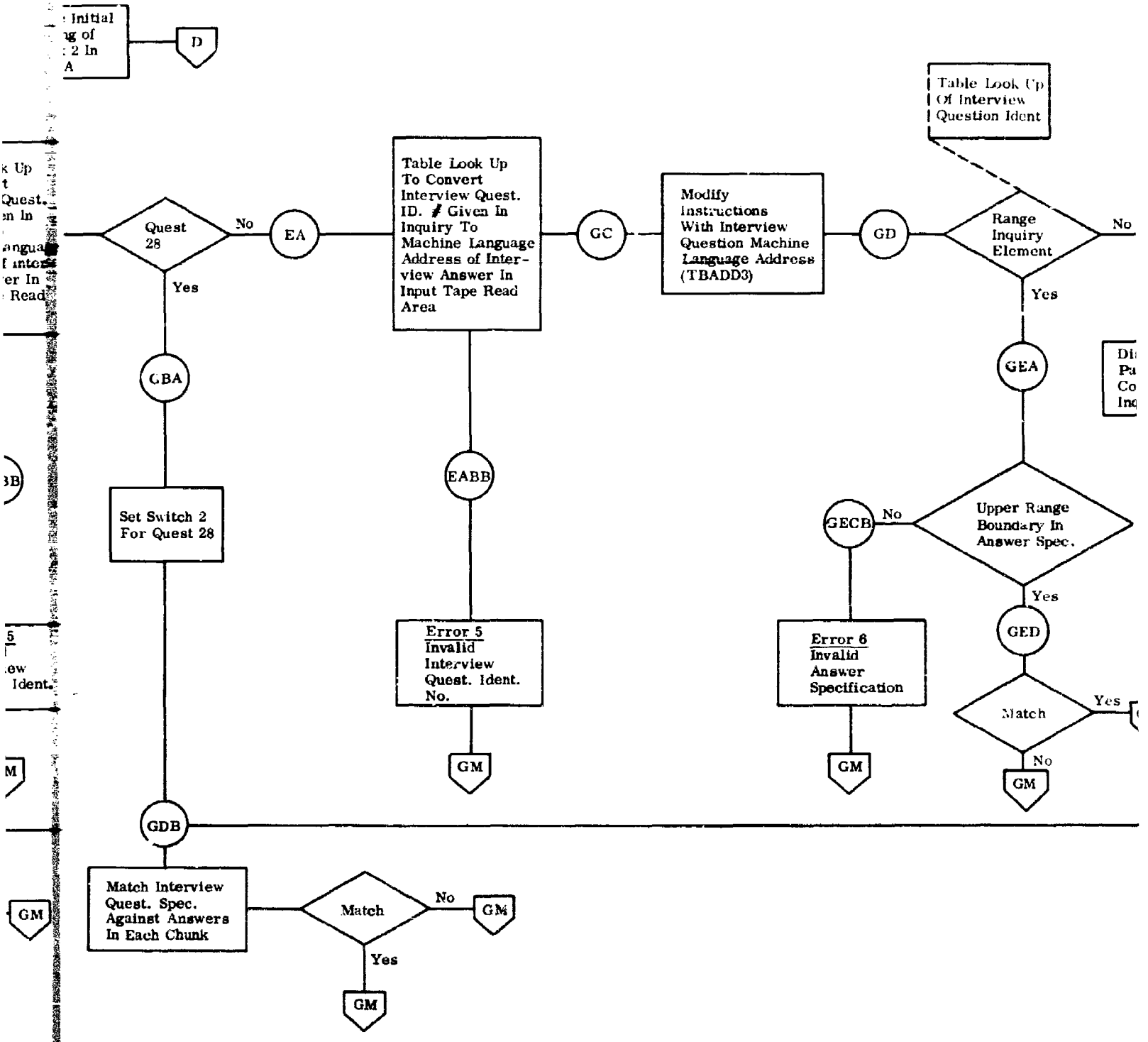
Initial
g of
2 In
A
D
Table Look Up
Of Interview
Question Ident
Quest
28
No
Yes
EA
Table Look Up
To Convert
Interview Quest.
ID. # Given In
Inquiry To
Machine Language
Address of Inter-
view Answer In
Input Tape Read
Area
GC
Modify
Instructions
With Interview
Question Machine
Language Address
(TBADD3)
GD
Range
Inquiry
Element
No
Yes
GBA
GEA
Set Switch 2
For Quest 28
EABB
GECB
No
Upper Range
Boundary In
Answer Spec.
Yes
Error 5
Invalid
Interview
Quest. Ident.
No.
Error 6
Invalid
Answer
Specification
GED
Match
Yes
No
GM
GM
GM
GM
GDB
Match Interview
Quest. Spec.
Against Answers
In Each Chunk
Match
No
GM
Yes
GM

B

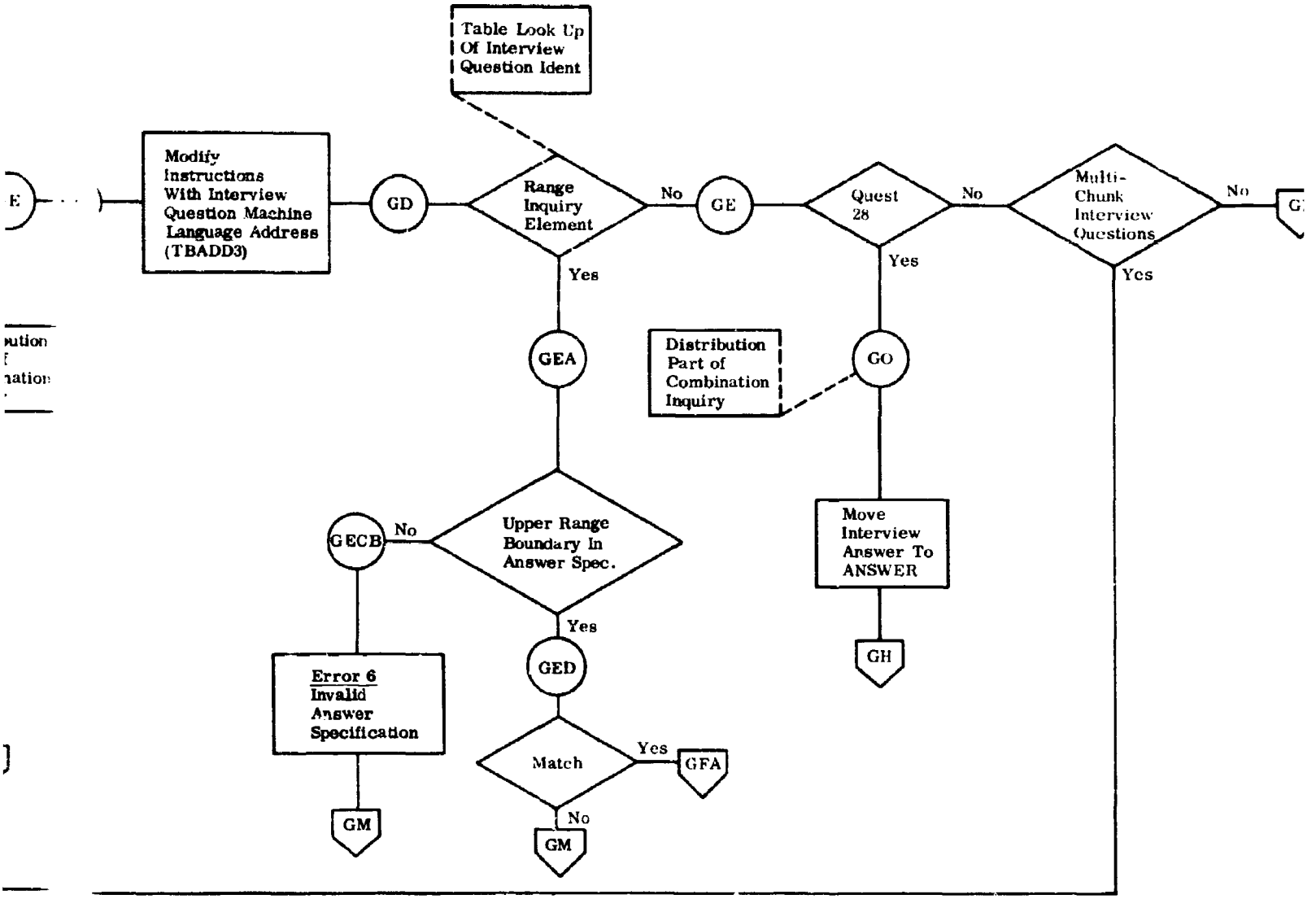

Figure 5-4. General Logic Flow Cha
Interview Data Tape — Analysis (ME00
(Sheet 4 of 5)

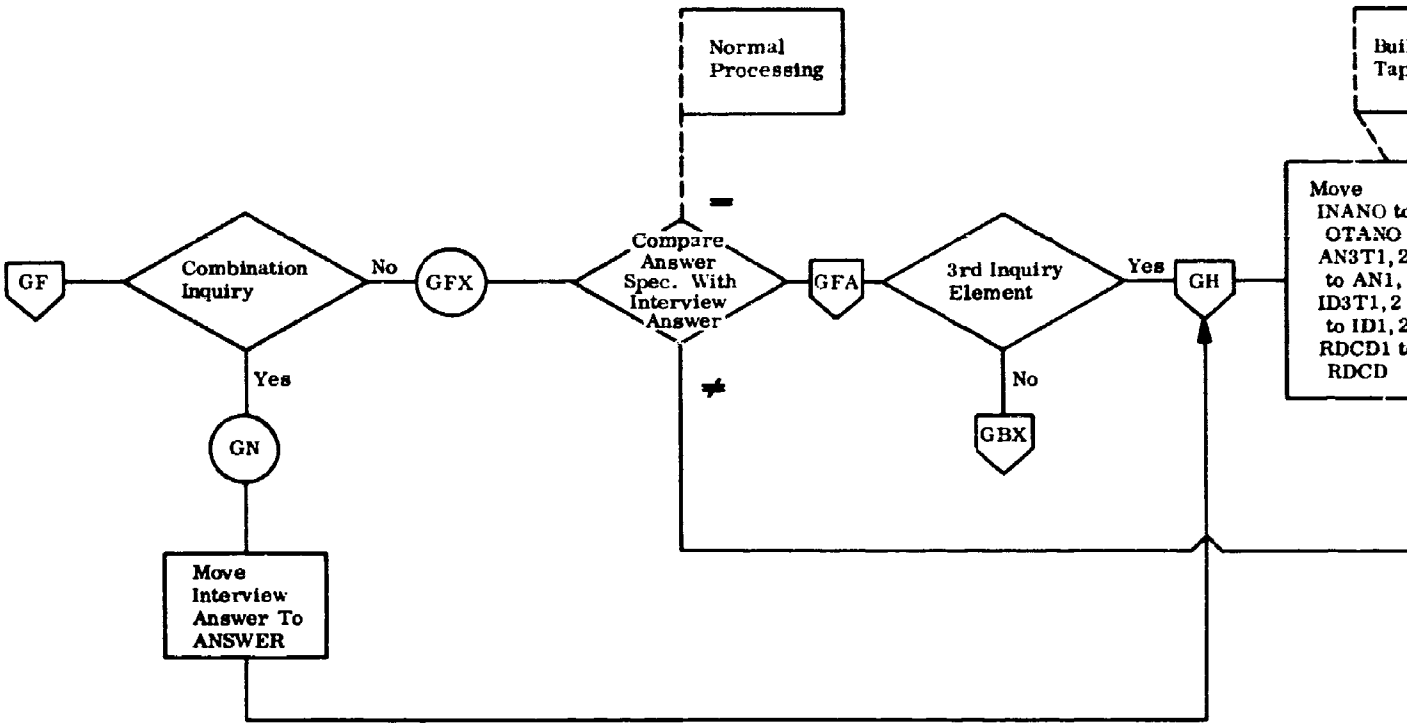

NOTE: Connectors ◯ and ⬠

Refer to symbolic labels which appear in the program listing.

A

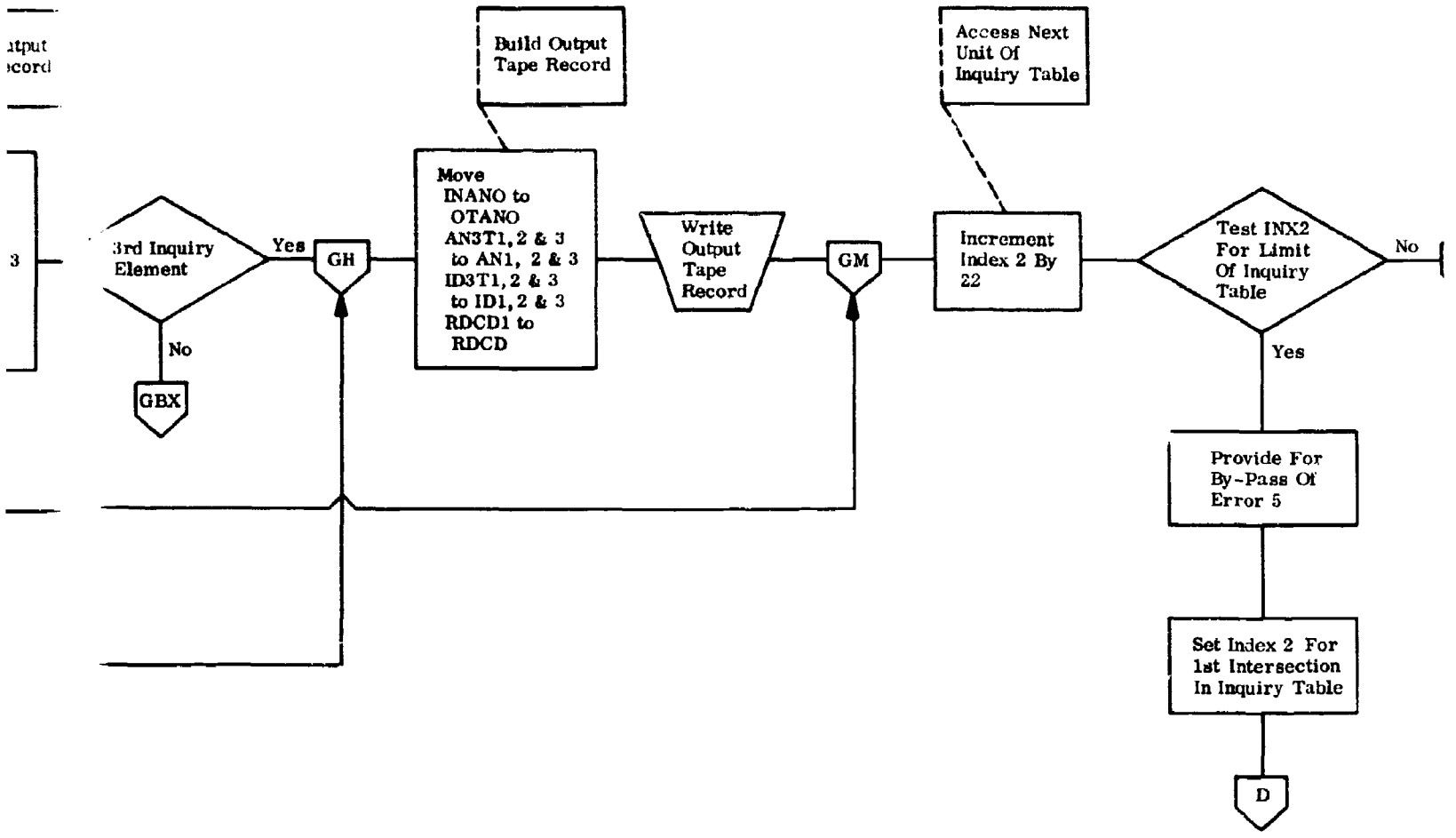

Figure 5-4. General Logic Flow Cha
Interview Data Tape — Analysis (ME0
(Sheet 5 of 5)

B

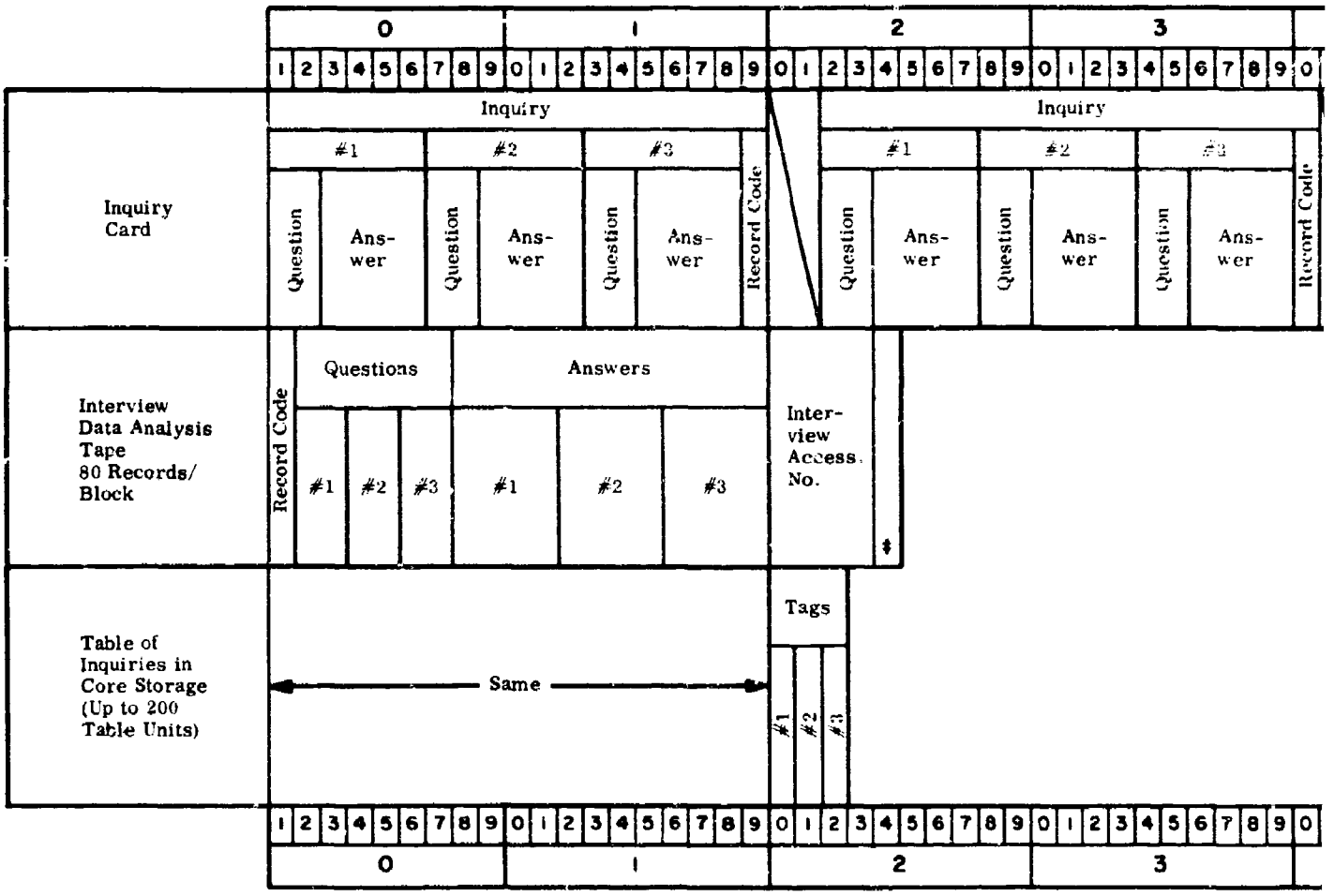
0
1
2
3
1 2 3 4 5 6 7 8 9 0 1 2 3 4 5 6 7 8 9 0 1 2 3 4 5 6 7 8 9 0 1 2 3 4 5 6 7 8 9 0
Inquiry Card
Inquiry
#1
#2
#3
Question
Answer
Record Code
Interview Data Analysis Tape 80 Records/ Block
Questions
Answers
Interview Access No.
Table of Inquiries in Core Storage (Up to 200 Table Units)
Tags
Same

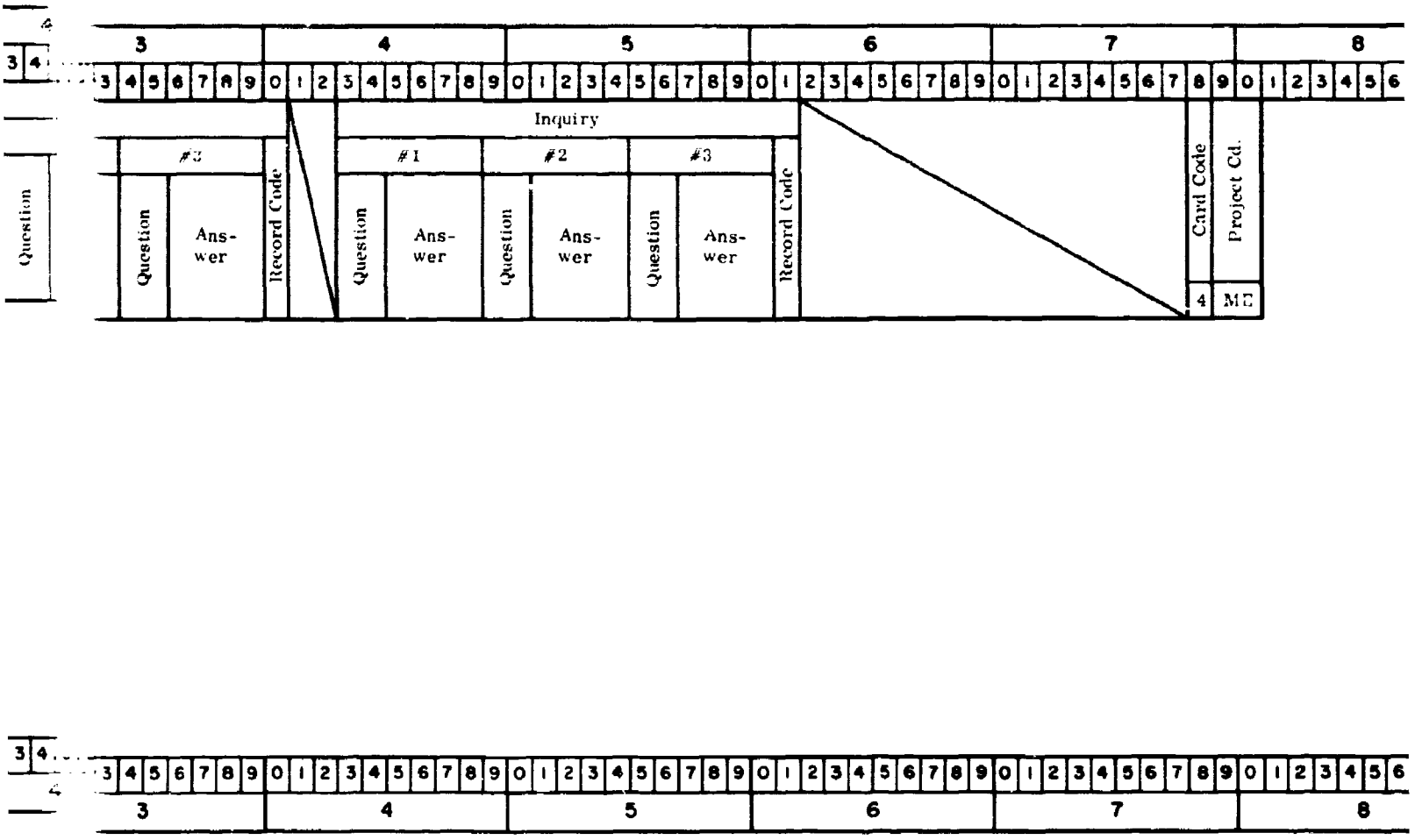

Figure 5-5. Record Layouts

Card Columns	Name of Field	Explanation
1-19	Inquiry #1	
1-2	Interview Question Identification #1	Blank or filled with two numeric digits identifying an interview question if three are specified for a distribution, intersection, or combination inquiry. For a negative element of an intersection or combination inquiry, superimpose an 11-zone punch in column 2. Right justify and fill high-order zeros if not blank.
3-6	Interview Answer #1	For distribution inquiry, leave blank. For an intersection or combination inquiry, fill with the specified answer to the interview question, which is an element of the intersection. Right justify and punch only valid answers requiring up to four characters, leave high-order positions blank when valid answer is less than four characters.
7-8	Interview Question Identification #2	Blank or filled with two numeric digits identifying an interview question if at least two are specified for a distribution, intersection, or combination inquiry. For a negative element of an intersection or combination inquiry, superimpose an 11-zone punch in column 8. Right justify and fill high-order positions with zeros if not blank.
9-12	Interview Answer #2	Same as for columns 3-6 above.
13-14	Interview Question Identification #3	Filled with two numeric digits identifying an interview question specified for any distribution, intersection, or combination inquiry. For a negative element of an intersection inquiry, superimpose an 11-zone punch in column 14.

Card Columns	Name of Field	Explanation
15-18	Interview Answer #3	For distribution inquiry, leave blank. For intersection inquiry, fill with the specified answer to the interview que tion, which is an element of the inter section. Right justify and punch only valid ans requiring up to four characters, leav high-order positions blank when valid swer is less than four characters. For combination, punch an asterisk(* in the low order position and leave three high-order positions blank.
19	Record Code	For distribution inquiry, leave blank. For intersection inquiry, punch a 2 if only the total number of interviews meeting the specification is required. Punch a 3 if both a listing of the acce numbers and the total number of inte views meeting the specification are r quired.
20-21		Always blank.
22-40	Inquiry #2	
22-23	Interview Question Identification #1	Same as for columns 1-2.
24-27	Interview Answer #1	Same as for columns 3-6.
28-29	Interview Question Identification #2	Same as for columns 7-8.
30-33	Interview Answer #2	Same as for columns 9-12.
34-35	Interview Question Identification #3	Same as for columns 13-14.
36-39	Interview Answer #3	Same as for columns 15-18.
40	Record Code	Same as for column 19.
41-42		Always blank.
43-61	Inquiry #3	
43-44	Interview Question Identification #1	Same as for columns 1-2.

Card Columns	Name of Field	Explanation
45-48	Interview Answer #1	Same as for columns 3-6.
49-50	Interview Question Identification #2	Same as for columns 7-8.
51-54	Interview Answer #2	Same as for columns 9-12.
55-56	Interview Question Identification #3	Same as for columns 13-14.
57-60	Interview Answer #3	Same as for columns 15-18.
61	Record Code	Same as for column 19.
62-77		Always blank.
78	Card Code	Autoduplicate "4".
79-80	Project Code	Autoduplicate "ME".

(2) Output Data Description

The Interview Data Analysis Tape is the output. The format follows (also see Figure 5-4):

Positions	Name of Field	Explanation
1	Record Code	Blank for distribution inquiries. 1 - For combination inquiries. 2 - For intersection inquiries for which only the frequency of responses is to be printed. 3 - For intersection inquiries for which both the interview accession number of each response and the frequency of responses are to be printed.
2-3	Interview Question Identification #1	Blank or two numeric characters, right justified with high-order positions filled with zeros.
4-5	Interview Question Identification #2	Same as above.
6-7	Interview Question Identification #3	Same as above.

Positions	Name of Field	Explanation
8-11	Interview Answer #1	Blank for inquiry with less than three elements. For a distribution inquiry, this field contains the actual answer to the spec fied interview question found in the interview identified by the accession number in positions 20-23. For an intersection or combination inquiry, this field contains the specif answer to the specified interview que tion.
12-15	Interview Answer #2	Same as above.
16-19	Interview Answer #3	Same as above, except that for combi ation inquiries, this field contains th actual answer to the specified intervi question found in the interview identi fied by the accession number in posit 20-23.
20-23	Interview Accession Number	A four digit number identifying the in view providing a response to an inqui
24	Record Mark	

(3) Operator Instructions

(a) Program Title and Number

INTERVIEW DATA TAPE - ANALYSIS, ME002

(b) Tapes

(i) Input - Interview Data Tape on Tape Drive 2.

(ii) Output - Interview Data Analysis Tape on Tape Drive
Unreadable record dump tape on Tape Drive

In the event that more than one tape reel is required for output, the IOCS automatically rewinds and unloads the completed reel. The operator merely loads another reel and presses start to continue. Since these tapes are to be sorted in the next run, keeping them in proper sequence is not important.

(c) Cards - Input

(i) Date Card. Insert the Date Card in the object program deck before the first EX Card (0144 in card columns 72-75).

(ii) RDLIN Card (ReaD Label INformation). Insert a RDLIN Card after the first EX Card (0144 in card columns 72-75) in the object program deck. This card is exactly the same as the one used for the computer run to create or maintain the Interview Data Tape.

(iii) Inquiry Cards. The Inquiry Cards are inserted immediately after the EX Card at the end of the first overlay (approximately 0177 in card columns 72-75) in the object program deck.

These cards will fall into the normal stacker after they are read. They are in random sequence and are identified by a card code of '4' in column 78 and a project code of 'ME' in columns 79-80.

(d) Sense Switches

I/O and A-ON.

(4) Programmed Error Instructions

(a) Error 1 (ER01)

(i) Printout: Contents of input card in error.

(ii) Condition: Something other than '4ME' in card columns 78-80.

(iii) Programmed action: The erroneous card is not processed and the next card is read.

(iv) Corrective action: Enter any non-processed inquiries in a subsequent run with a correct Inquiry Card.

(b) Error 2 (ER02)

(i) Printout: Contents of input card in error with the particular erroneous inquiry on the card identified by position as '1ST,' '2ND,' or '3RD'.

(ii) Condition: There are more than 200 inquiries being entered in the same run.

(iii) Programmed action: The excess inquiries are not processed.

(iv) Corrective action: Enter the non-processed inquiries in a subsequent run.

(c) Error 3 (ER03)

(i) Printout: Same as for Error 2.

(ii) Condition: Either a distribution inquiry has some characters in a field reserved for interview answers, or an intersection inquiry has some record code other than 2 or 3, or a combination inquiry does not have at least one specified question and answer.

(iii) Programmed action: The erroneous inquiry is not processed.

(iv) Corrective action: Correct the inquiry and enter the new Inquiry Card in a subsequent run.

(d) Error 4 (ER04)

(i) Printout: Same as for Error 2.

(ii) Condition: Interview Question #96 or 97 has been specified in an inquiry of a type other than a simple frequency distribution.

(iii) Programmed action: The erroneous inquiry is not processed.

(iv) Corrective action: Correct the inquiry and enter the new Inquiry Card in a subsequent run.

(e) Error 5 (ER05)

(i) Printout: Contents of erroneous unit in inquiry table stored in core memory. Each inquiry entered in a run is stored in a single unit of this table.

The format of each unit of the inquiry table is the following (also see Figure 5-5):

Positions	Name of Field
1	Record Code
2-3	Interview Question Identification #1
5-6	Interview Question Identification #2
6-7	Interview Question Identification #3

Positions	Name of Field
8-11	Interview Answer #1
12-15	Interview Answer #2
16-19	Interview Answer #3
20-22	Tags for internal computer processing

(ii) Condition: Invalid Interview Question Identification.

(iii) Programmed action: The inquiry containing the invalid Interview Question Identification is not processed.

(iv) Corrective action: Consult procedures in Paragraph 5.6, Item (1) for a list of valid interview question identification numbers. Consult procedures in Paragraph 5.7 for specifications of Inquiry Card. Correct the inquiry and enter the new Inquiry Card in a subsequent run.

(f) Error 6 (ER06)

(i) Printout: Contents of erroneous unit in inquiry table stored in core memory. Each inquiry entered in a run is stored in a single unit of this table. Also printed out on the same line is the incorrect answer specification.

(ii) Condition: In an intersection inquiry in which is specified an interview question having several ranges of possible answers in contrast to discrete answers, an upper range boundary has not been specified.

(iii) Programmed action: The erroneous inquiry is not processed.

(iv) Corrective action: Enter in a subsequent run an inquiry in which only upper range boundaries are specified for answers to interview questions which have several ranges of valid answers. Such questions and the upper range boundaries of their valid answers appear below.

Question Identification	Upper Range Boundaries
02	Two blanks
	05
	10
	15
	20

AUERBACH

Question Identification	Upper Range Boundaries
	25
	30
	35
	40
	99
03	Two blanks
	05
	10
	20
	90
	99
05	15
	20
	25
	30
	35
	40
	45
	50
	55
	60
	99
08	01
	05
	99
17	005
	022
	132
	999
95	Three blanks
	007
	014
	030
	060
	120
	999
98	060
	115
	130
	145
	160
	999

5.9 COMPUTER RUN TO SORT ANALYSIS TAPE

The purpose of this run is to sort the individual records on the Interview Data Analysis Tape so that their frequency by various control fields can be determined.

(1) Sort Specification

(a) Major to Minor Fields

Field Name	Tape Record Positions
Record Code	1
Interview Question Identification #1	2-3
Interview Question Identification #2	4-5
Interview Question Identification #3	6-7
Interview Answer #1	8-11
Interview Answer #2	12-15
Interview Answer #3	16-19

(b) Tape Header and Trailer Labels. None.

(c) Record and Block Size.

(i) Records. 24 characters including record mark.

(ii) Blocks. Fixed length, 80 records per block, last block padded with 9's, if necessary, to make an 80 record block.

5.10 COMPUTER RUN TO FORMAT ANALYZED INTERVIEW DATA AND TO PRINT

This computer run calculates from the sorted Interview Data Analysis Tape the frequencies and totals required by the inquiries. For distribution and combination inquiries, these frequencies are formatted in matrices, row and column percents are calculated, and row and column totals are calculated. For intersection inquiries, the responsive interview accession numbers, if required, and the total count of accession numbers are simply formatted across one line after another. As the response to each inquiry is formatted, its identification and the responses in required form are printed out. See Figure 5-6 for general logic flowchart.

AUERBACH ®

(1) Input Data Description. The Sorted Interview Data Analysis Tape is the input.

If the input file is contained on more than one reel, the operator must keep the reels in the sequence that they were produced by the sort. He must also turn Sense Switch G On until the next to last reel has been completed. At the end of each reel the program unloads the completed reel and halts if Sense Switch G is On. This allows the operator to change to the next input reel. He then readies the next input reel and presses start to continue. Before starting the final reel, the operator must turn Switch G Off.

(2) Output Data Description. The output is the printed listing on continuous form paper in the following format.

(a) Inquiry Identification

(i) Frequency Distribution Inquiries. X, Y, and Z, appearing below, indicate fields for each specified Interview Question Identification Number.

Simple

Print positions 1-14.
"DISTRIBUTE XX."

Two-level frequency distribution

Print positions 1-25.
"WITHIN YY, DISTRIBUTE XX."

Three-level frequency distribution

Print positions 1-32.
"WITHIN ZZ, DISTRIBUTE YY AND XX."

(ii) Intersection Inquiries

For a negative element in an Intersection Inquiry, the word "NOT" is substituted for the word "ANSWER" in all of the following headings.

X, Y, and Z, appearing below, indicate fields for each specified Interview Question Identification Number and I, J, and K indicate fields for each specified Interview Answer.

Single element

Print positions 1-39.
"INTERSECTION--QUESTION XX, ANSWER III."

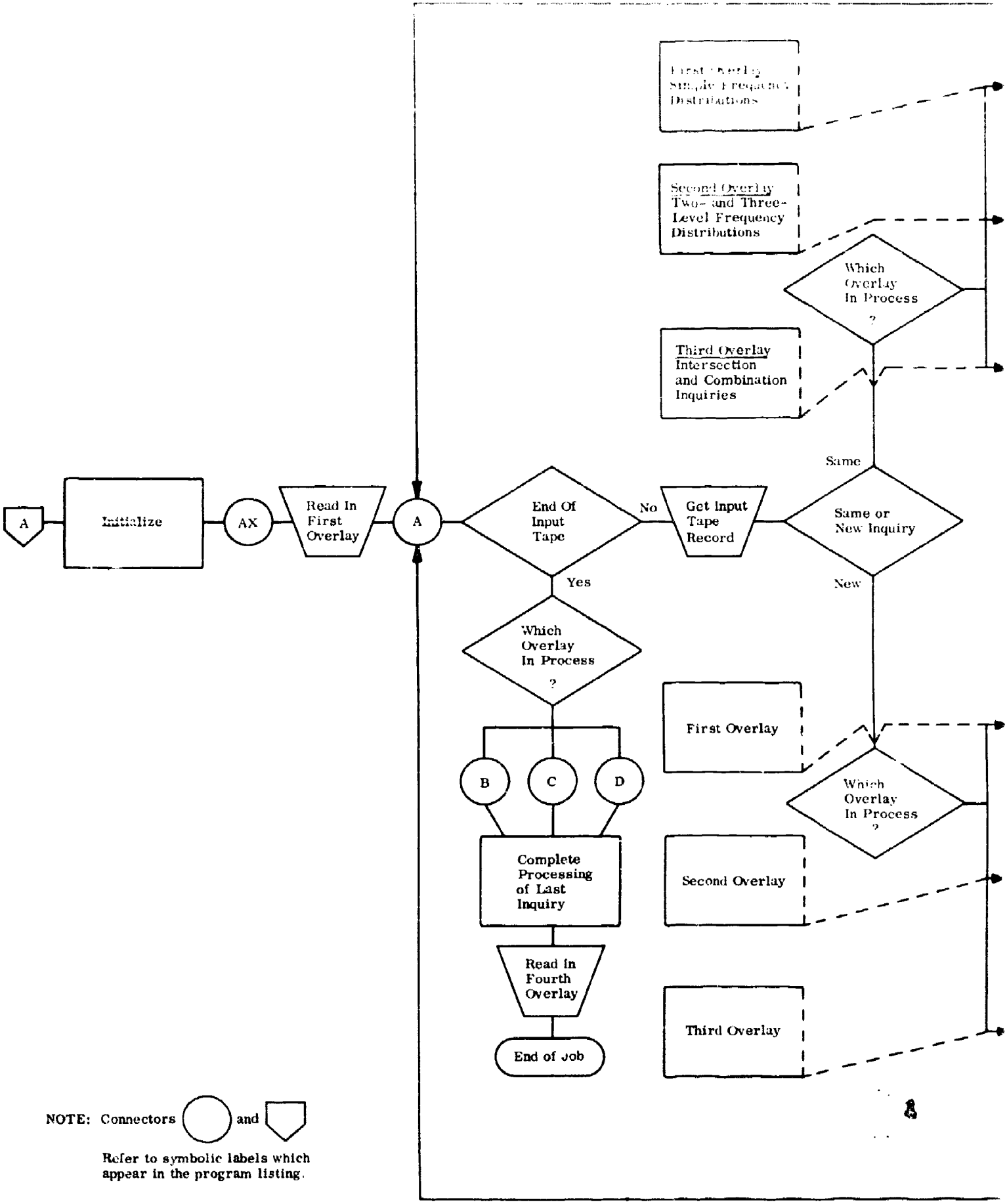

NOTE: Connectors ◯ and ⬠

Refer to symbolic labels which appear in the program listing.

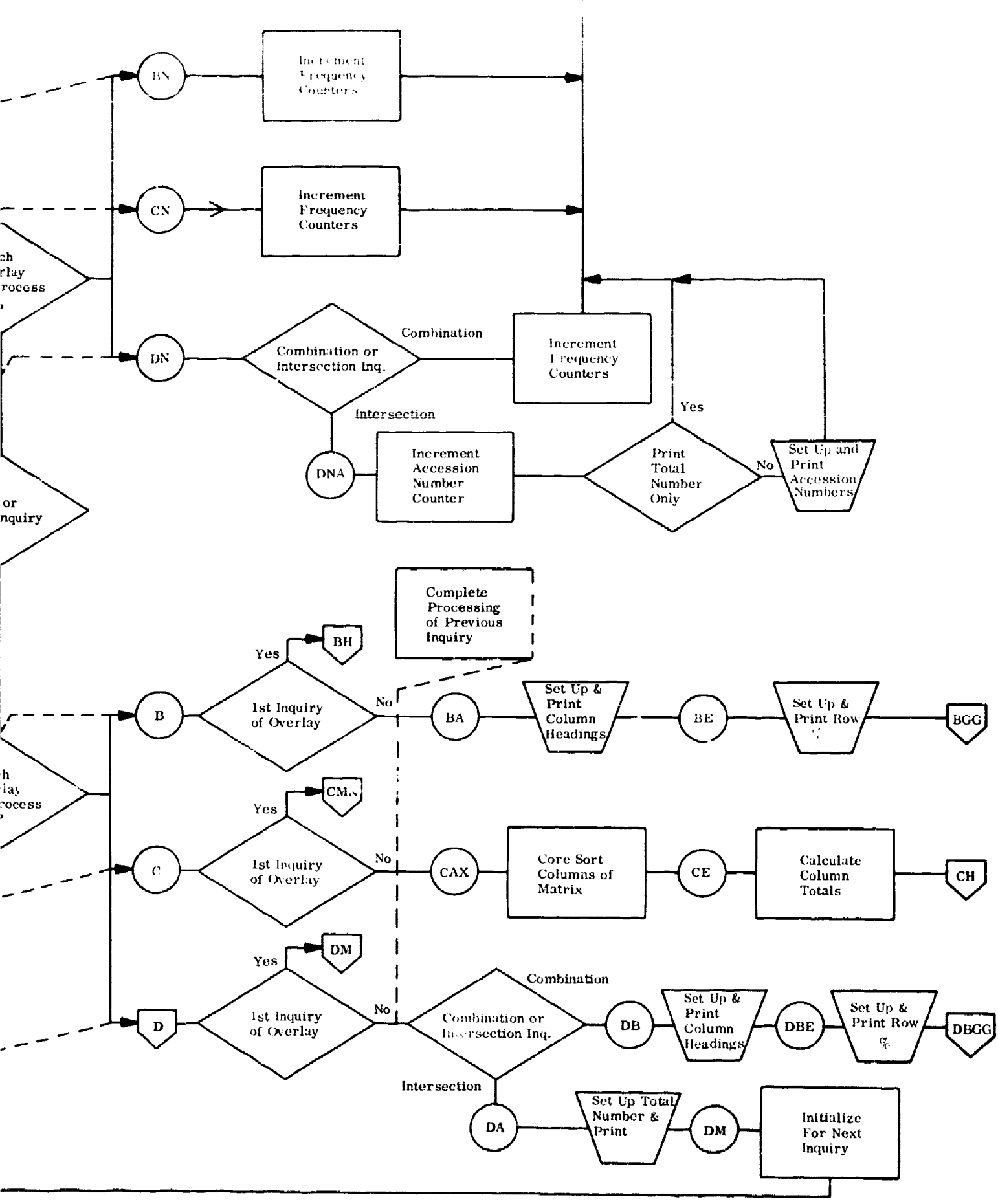

Figure 5-6. General Logic Flow Chart. Format Analyzed Data and Print (ME004) (Sheet 1 of 2)